Smederevac

INSTRUCTIONS FOR INSTALLATION AND USE

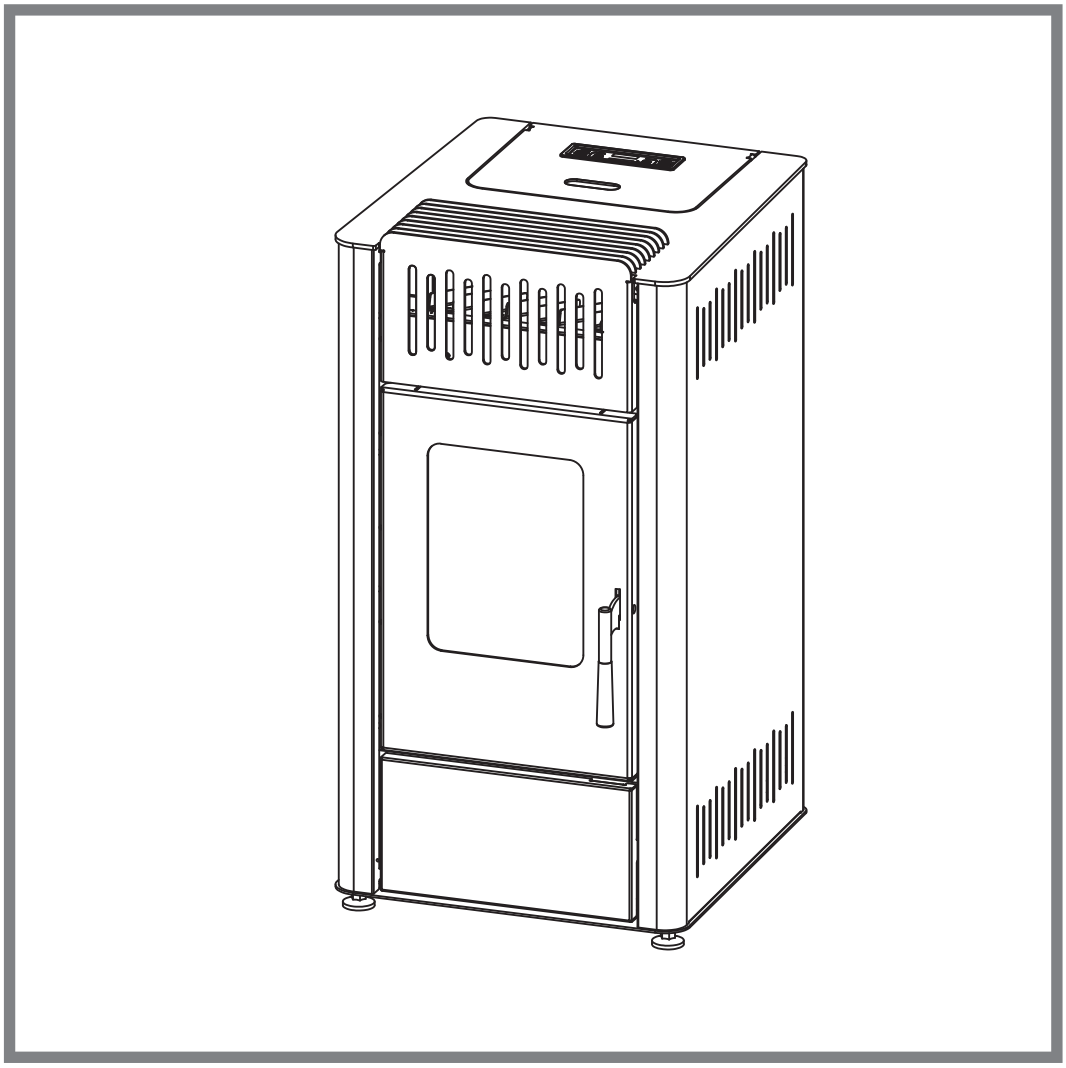

Pellet stove

HELLIA

Dear customer

Thank you for trusting us and deciding to buy our product.

You made a good choice, since the stove has technical characteristics that place it at the very top of it's class, which you will see during operation.

Please read these instructions carefully before using the stove, as it will provide you with advices for proper handling.

We believe that you will become one of our many satisfied customers.

Smederevac d.o.o.

CONTENT:

1. Introduction 2
2. General Safety Information 2
3. General Notes 3
3.1. Responsibility 3
3.2. Spare Parts 3
3.3. Packaging 3
3.4. Combustion 3
3.5. Stove Parts 5
3.6. Technical Information 6
4. Safety Devices 6
5. Stove Positioning and Installation 6
5.1. Environment 6
5.2. Connecting the Stove to the Chimney 7
5.3. Stove Connection Examples 8
6. Stove Commissioning – Obligation of the Authorized Person 13
7. Stove Cleaning and Maintenance 13
7.1. Daily Stove Cleaning 13
7.2. Periodic Stove Maintenance 14
7.3. Wool Braid 14
8. The Pellet 15
9. Handling 15
9.1. Stove Commissioning 16
9.2. Adjusting the Heating Intensity (Heating Power) 17
9.3. Adjusting the Room Temperature 17
9.4. Achieving the Desired Temperature During Operation 18
9.5. Turning the Stove Off 18
9.6. Starting the Spiral and the Dispenser without Starting the Stove Due to Lack of Pellet 18
9.7. Remote Control 19
9.8. Display Clock and Date Setting 20
9.9. Language Setting 21
9.10. Stove Operation Programming 21
Daily Programming 22
Weekly Programming 24
Weekend Programming 25
9.11. STAND - BY Mode Programming 26
9.12. Pellet Type 27
9.13. Stove Cleaning Warning Message 28
10. Alarms 29
11. Warranty Statement 32

1. INTRODUCTION

Important:
Please read these instructions carefully.
They describe all the phases and give all the advices for smooth stove operation.
In case of non-compliance with these instructions for use, the manufacturer does not bear any liability for the caused damage.

Notice:
The stove commissioning (the first start-up) must be performed by an authorized person. In the event of a fault or defect, for which a solution is described in the instructions, the service by a technician will becharged!

How to Use the Instructions:
With these instructions, **Smederevac d.o.o.** wants to provide the user with all the necessary information for the safe use of the stove, in order to avoid possible damage to the stove, items around the stove and injuries during improper use of the stove.

Warning:
These instructions are an integral part of the stove, so please check whether it was delivered with the stove. In case the instructions are lost or damaged, request a copy of instructions from the company **Smederevac d.o.o.** or from an authorized distributor.

The stove is intended for heating purposes.
The use of the stove for any other purpose is strictly prohibited.
In the event of such operation, Smederevac d.o.o. does not bear any liability for the caused damage.

Smederevac d.o.o. shall not be liable for physical and mechanical damage if it occurs during the transport from the company to the distributor and from to distributor to the user!

2. GENERAL SAFETY INFORMATION

The installation must be carried out by authorized technicians who assume full responsibility for the installed stove and guarantee that it will operate without any issues caused by improper installation.

Important:
- Children aged 8 years and older, persons with reduced physical, motor or mental abilities, persons lacking experience or insufficiently trained, may use these appliances provided that they are supervised or have been given instructions concerning the safe use of the appliance and have been informed of the hazards arising from such use. Children must not play with these appliances. Appliances must not be cleaned or subjected to user maintenance by children without appropriate supervision.
- Do not allow pets to approach the stove.
- The stove generates heat during operation. Do not touch the hot parts of the stove (glass, flue outlet, door), as there is a risk of burns.
- Do not allow children to touch the hot parts of the stove.
- **Do not open the firebox door while the stove is in use**.
- Remove the ash from the ash pan only when the stove and the ash are cold.
- Clean the firebox and internal components of the stove only when the appliance is unplugged and both the stove and ash have cooled down completely.
- Use only original spare parts supplied by the stove manufacturer.
- Only pellets may be used as fuel.
- Ensure a continuous supply of clean air to the room in which the boiler is installed.
- The appliance is made of recyclable materials.
- During stove operation, the chimney draft must be 12±2 Pa.
- A stove that is no longer in use must not be disposed of in general waste. There are designated collection points where the appliance can be disposed of in accordance with guidelines for the disposal of used electrical and electronic equipment.
- Do not switch off the stove by pulling the cable out of the socket. Adhere to the instructions set out in the "Operation" chapter.
- Children may only be near the stove when supervised by an adult.
- Report all complaints assessed as defects or improper operation of the stove to the factory or authorised service centre by telephone or in writing. The technical service telephone numbers are provided at the end of these instructions.
- When the stove is turned on for the first time, fumes from the protective coating and paint off-gassing from internal components may occur. In such cases, the room must be thoroughly ventilated until all fumes and odors are eliminated.
- If unauthorized personnel perform servicing or any repairs and modifications to the stove, the owner forfeits the right to warranty service, and Smederevac d.o.o. bears no liability for any subsequent damage caused by unauthorized servicing.
- The stove is supported by adjustable feet, which should be adjusted so that the stove is stable and level.
- The stove is equipped with an automatic pellet ignition system; therefore, lighting the fire by any other means is strictly prohibited.
- Any malfunction of the stove must be resolved exclusively by factory or authorized service center.

3. GENERAL NOTES

Stoves must be installed in rooms only. Stoves are controlled by an electronic display, so that combustion is fully automated and controlled via electronics. Turning the stove on and off and the desired power are controlled electronically. This is enabled via 5 stove operationmodes. Therefore, such control of the stove's operation guarantees safe operation.

The fire-pot where the pellet burns is constructed to enable most of the combustion products to end up in theashtray. However, the fire-pot must be checked daily since not every pellet is of the same quality, so the combustion products may retain at the bottom of the firepot (see section "Stove Cleaning and Maintenance").
The glass has a special air circulation for self-cleaning, however glass staining due to poor quality pellets cannot be avoided, as well as the appearance of a slightly grayish color due to dust sticking on the glass during several hours of operation.

3.1 Liability

Smederevac d.o.o. denies both civil and criminal liability by delivering this manual, for any accidents caused by complete or partial non-compliance with the contents of these instructions.
Smederevac d.o.o. denies any liability arising from improper use of the stove by the user, misuse of the stove by the user, inadequate modifications and alterations to the stove or for use of inadequate stove spare parts.

The manufacturer denies any civil or criminal liabilityarising out of:
- Poor stove maintenance
- Non-compliance with the manufacturer's instructions and advices
- Stove not being used in accordance with the protection instructions.
- Installation not in accordance with the country's regulations.
- The stove being installed by an unauthorized person
- Modifications and changes not approved by the manufacturer.
- Use of non-original spare parts.
- Damages due to natural disasters or mains failures (floods, lightning strikes, increase in mains voltage, etc.)
- Poor maintenance of the flue ducts and the chimney
- Use of inadequate pellet

3.2 Spare Parts

Only use original spare parts. It is not recommended to wait for the components to become fully damaged before exchange. Exchange the damaged parts before full damage to avoid possible injuries and malfunctions.
Ordering of the spare parts exclusively from authorized distributors or directly from the manufacturer bearing in mind the delivery period.
distributera ili direktno od proizvođača i imati u vidu rok isporuke naručenih delova.

WARNING!
If the fire-pot overloads during the stove operation, the pellets may self-ignite in the pellet storage, therefore it is MANDATORY to clean the complete stove according to the instructions for use, checking the condition of sealing braids on the firebox door, ashtray door and fire-pot.
If the stove is still overloading, contact the factory service center at: +381 26 633 670

3.3. Packaging

The packaging is designed to provide for good protection due to stove manipulation However, despite this, damage is possible due to transport from the company to the distributor and from the distributor to the user.
It is necessary to inspect the stove and in case of some damage inform the authorized distributor or **Smederevac d.o.o.** and report the problem in order to solve it as quickly as possible.
Smederevac d.o.o. shall not be liable for physical and mechanical damage if it occurs during transport from the company to the distributor and from the distributor to the user!
The stove packaging is removed when the stove is installed, i.e. before the stove is put into operation.
All materials are recyclable. Packaging materials (styro foam, plastic bags, and polyester parts) should be kept away from children.
Plastic parts of the packaging are disposed in the designated locations in accordance with the regulations. Burning or destroy them contrary regulations is prohibited.
The wooden parts of the packaging are connected with nails, therefore, uncover and dispose of them carefully to avoid injury.

3.4. Combustion

Combustion is a process between fuel and an oxidant, where heat is created due to change in chemical components. Light in the form of can appear when heat is released, in the form of embers or flame.

Three elements necessary for combustion are:
- Flammable fuel (pellet)
- Oxidant (oxygen, usually from the air)
- Ignition (electric heater)

In order to achieve combustion, the fuel and the oxidant must be available in the proper ratio. The reaction between these two elements is started by a stoked heater which ignites the pellets that are in the stove fire-pot, and then the fuel and the oxidant are mixed resulting in combustion.
This is the so-called hot reaction start because the heat transfers from the glowing lighter to the pellet. Combustion can be one of the indicators of whether everything is all right with the device.
The following examples may help to properly respond and know what to do before calling for service center.

Image 1a shows inadequate combustion in the form of a weak flame. In this case, it is necessary to check whether the flue ducts are unobstructed, i.e. if there is any clogging including in the chimney. The next step is to check if the stove is dirty. If not cleaned for a long time, the flue ducts inside the stove can become clogged (see section "Stove Cleaning and Maintenance ").
Finally, check that the parts of the stove have beenproperly returned to their place.
If the fire-pot is displaced, excess air may enter leading to overloading of the fire-pot (Image 1b) and the flame may be too strong (Image 1c), which can lead to the burning of pellets in the storage. You should also check all silicone braids that lose their elasticity over time and thus affect the sealing of the stove.

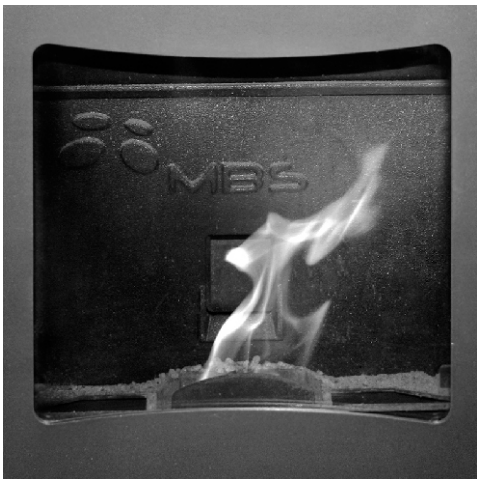

Image 1a



Image 1b



Image 1c

In addition to these recommendations, combustion is also affected by the quality of pellet, which is explained in the section on pellet.
If there is nothing wrong with the appliance but the described issue still occurs, immediately inform the authorized service center or the company's service department in writing or by phone.

Image 2 shows the flame corresponding to proper combustion and stove operation. The flame is a yellow-white color, and there is a minimal quantity of dust and unburned pellet in the fire-cup.

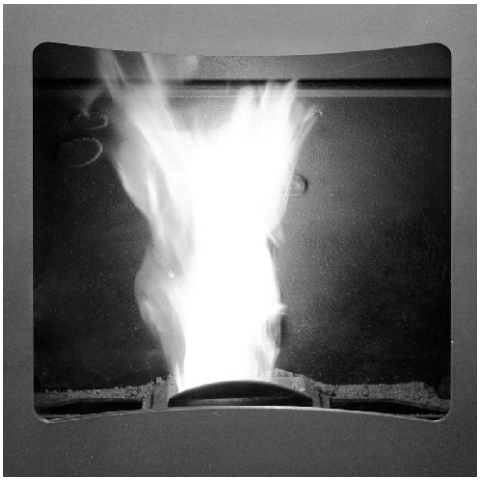

Image 2

3.5. Stove parts (Image 3)

1 – electronic controller
2 – pellet container door
3 – pellet container
4 – top plate
5 – side
6 – firebox door
7 – firebox door glass
8 – firebox door handle
9 – ashtray door
10 – ashtray
11 – burner
12 – front
13 – legs
14 – flue
15 – thermal switch
16 – on/off switch
17 – power connection cable
18 – room temperature probe

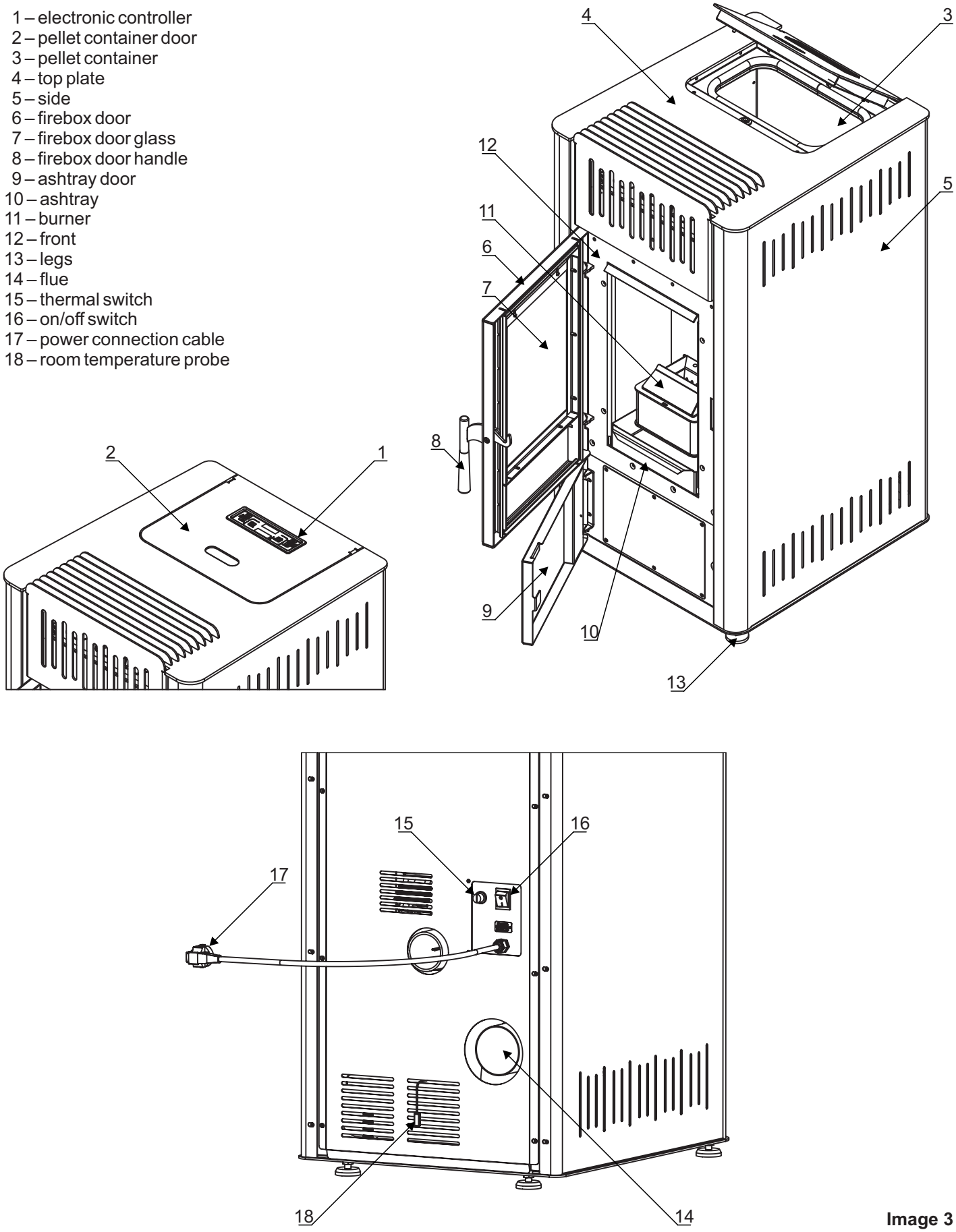

Image 3

3.6. Technical Information

A table according to EN 16510-1 is supplied as an additional document together with thismanual.
The table provides information on the characteristics and performance of this appliance.

Height from the floor to the flue connection axis	mm	220	
Voltage (50Hz)	V	230	
Dimensions (H x W x L)	mm	1000x520x560	
Weight	kg	120	
Chimney connection	position / mm	back / Ø80	
Stove power	kW	nominal - 8,1	reduced - 3,9
		at nominal power	at reduced power
Energy efficiency	%	91,9	93,1
Seasonal efficiency	%	82	-
Output gas temperature	°C	117	79
Mass flow rate	g/s	5,9	3,8
CO content (normalized to 13% O_2)	mg/Nm³	31	138
Dust emissions (normalized to 13% O_2)	mg/Nm³	19	20
OGC (normalized to 13% O_2)	mg/Nm³	28	55
NOx (normalized to 13% O_2)	mg/Nm³	151	153
Fuel consumption	kg/h	1,8	0,8
Fuel		Pellet	
minimalno rastojanje do zapaljivih materijala: - od zadnjeg zida - od bočnih zidova - od gore - od napred - u prednjem području zračenja na podu - u području zračenja prema bočnom zidu - ispod donjeg dela	 d_R d_S d_C d_P d_F d_L d_B	 30 cm 55 cm 80 cm 200 cm 150 cm 150 cm 0 cm	

IMPORTANT!
It is preferable to use a U.P.S. (Uninterruptible Power Supplies – minimum 600W sine wave rectifier) to avoid problems in case of power failure.
Damage due to power failure or large fluctuations in the supply voltage is not covered by the warranty!

4. SAFETY DEVICES

The stove is equipped with sophisticated safety devices that stop the operation of the stove in case of unforeseen situations, thus preventing all consequences that may be caused by improper operation of the stove.

In any case, when a problem occurs, the devices will stop adding pellet and the phase of stove shutting down will begin. This will be manifested by a corresponding alarm on the display (more details in the "Alarms" section).

5. STOVE POSITIONING AND INSTALLATION

5.1 Environment

Positioning the stove is key to successful heating.
Before you decide where to position the stove, you must consider the following:
- The stove is connected to voltage of 230V/50Hz.
- The connection location must be determined in accordance with the requirements of the power distributor and the current regulations.
- The power cable must be uninterrupted and free of damage, must not pass over heated parts of the stove or over other devices that may damage it.
- The load-bearing capacity of the floor where the stove is installed must be sufficient to withstand the weight of the stove.
- Combustion air cannot be obtained from closed rooms

(garages) or from rooms without ventilation. Ventilation must be provided so that fresh air, which is needed for combustion, reaches the stove.
- It is not recommended to install the stove in a bedroom, bathroom or a room intended for storage.
- If the stove is installed on a wooden floor, it is recommended to install a protective plate (glass, aluminum sheet) that exceeds the dimensions of the stove, 10 cm on the side and 30 cm on the front.
- It is best to install the stove in the largest room in the facility in order to fully utilize the stove.
- The minimum room size where it may be installed is 20-25 m^2, otherwise the stove will not be properly utilized.
- The installer should guarantee easy access to the stove and chimney.
- The stove must not be placed in the immediate vicinity of wooden elements, cooling devices, plastic furniture elements or other flammable materials.
- The minimum front distance from flammable materials should be 100 cm, side distance 25 cm and back distance 25 cm.

5.2 Connecting the Stove to the Chimney

Before you install the stove, check whether the chimney is designed in accordance with regulations, whether there are obstacles in the chimney and cracks that must be repaired. Classic masonry chimneys or duct chimneys can be used as flues, but the ducts must be well sealed at the joints and insulated so as not to create condensation. The smoke extraction system (chimney) made of metal pipes must be earthed in accordance with current legal regulations. This is required by law. The chimney earthing connection must be independent of the stove earthing.

The stove must not be installed without a chimney. If the stove is installed without a chimney, the owner is responsible for any disturbances in the operation of the stove.

The chimney must have the following features:
- The top of the chimney must be wind resistant
- The top of the chimney must be equipped with a cap for rain protection.
- Maximum cross-section 15x15 cm (15 cm diameter), maximum height 4 - 5 m.
- It must have a seal at the connection between the flue ducts and the chimney.
- It must have an inspection fitting.
- It must have a section for condensate collection and drainage.

The stove is constructed to be connected to the chimney with flue ducts of 80 mm diameter. Flexible pipes for stove's connection to the chimney are not allowed. The flue ducts from the stove to the chimney must be installed so to observe the tightness of the joint. **We recommend using flue ducts with rubber sealing elements, if flue ducts do not have rubber or some other silicone sealant, you must place temperature silicone on the inner rim of the duct to connect them, otherwise smoke may leak at the joints. Smoke is a product of combustion and stains the walls with black spots.**
The stove must be installed on only one chimney (external or internal) and only one stove can be installed on one chimney. The use of mash at the end of flue ducts is absolutely prohibited because the stove may not function well. No more than 3 curves at an angle of 90° can be used to connect to the chimney, the maximum length of horizontal flue ducts can be 1 m while the maximum vertical length can be a maximum of 2.5 m.

Important:
Before installing the stove, check the draft in the chimney, since it is one of the key factors for proper stove operation. You will find an example below of the easiest method to check if the chimney draft is sufficient.
You need one lighted candle to check the chimney draft. Bring the candle flame to the chimney connection opening and if the flame bends towards the opening, the draft is satisfactory (Image 4b). If the flame bends only slightly this indicates a problem with the chimney and poor draft (Image 4a). Please note that this is an empirical check of the chimney and does not have to be definitive, the most definitive checks are performed with devices designed for this purpose.

When the Smederevac d.o.o. teaminspects the reported complaint, they will perform an obligatory check of the chimney draft with a device certified according to the European standard.

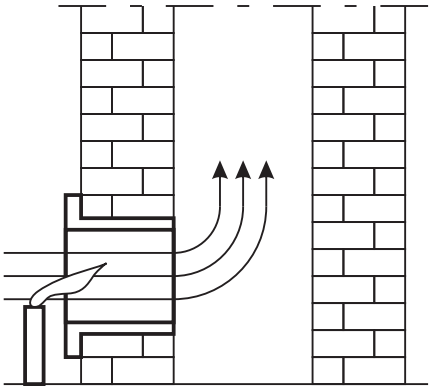

Image 4a

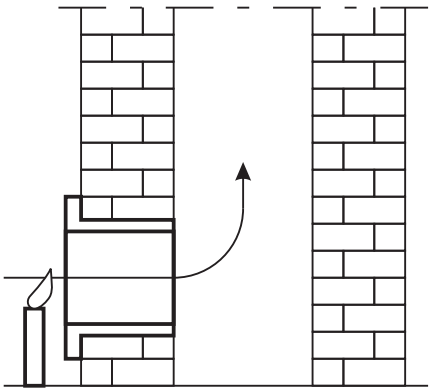

Image 4b

If the chimney draft is poor, make sure to check if the chimney is free of defects. The chimney could be located within the building (internal chimney) or outside of the building (external chimney). If the stove is installed with an external chimney, it must be insulated.

Chimney defects may include:
- Poorly designed windshield.
- Foreign objects, protrusions or other obstacles in the chimney.
- Chimney cracks.
- Accumulated soot (due to lack of cleaning).
- Duct inserted too deep in the chimney.
- Fireplace without a door or another opening on the chimney.

5.3 Stove Connection Examples

Image 5 shows the back of the stove where the flue position is visible.

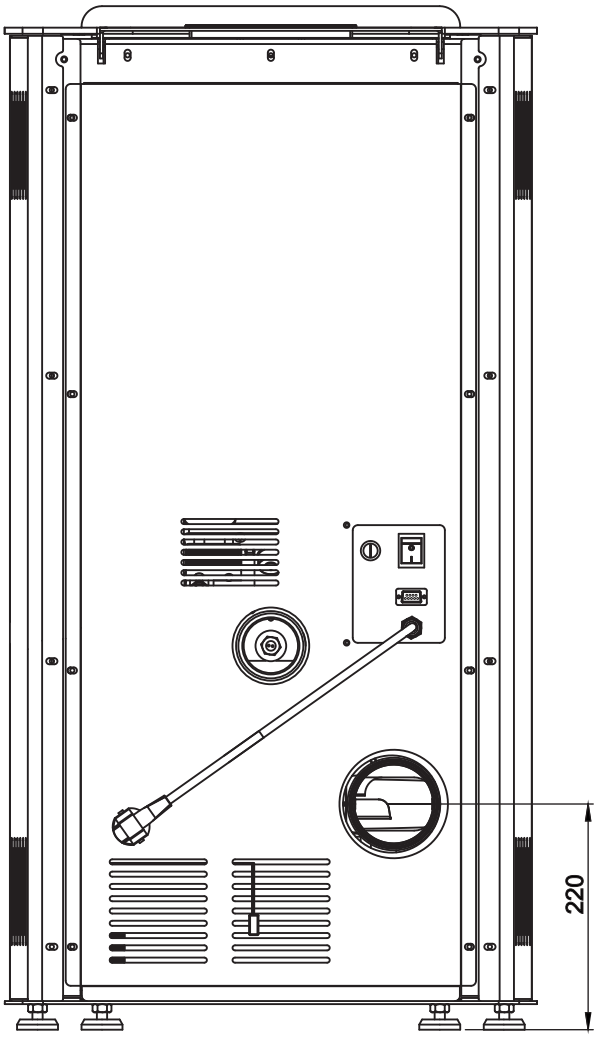

Image 5

The connection of the stove to the chimney is performed with flue ducts that have sealing rubber at the joints and contain a tee with a condensate container so that in case of condensation, it does not return from the chimney to the boiler!

The following pages show some of the examples of proper and improper stove connection.

Connection to External Chimney

Image 6 shows the correct connection to the external chimney.
The chimney must have proper insulation. The top must be fitted with a cap for rain and wind protection, while the bottom must be fitted with a tee for collection of condensate in the chimney.

Image 6

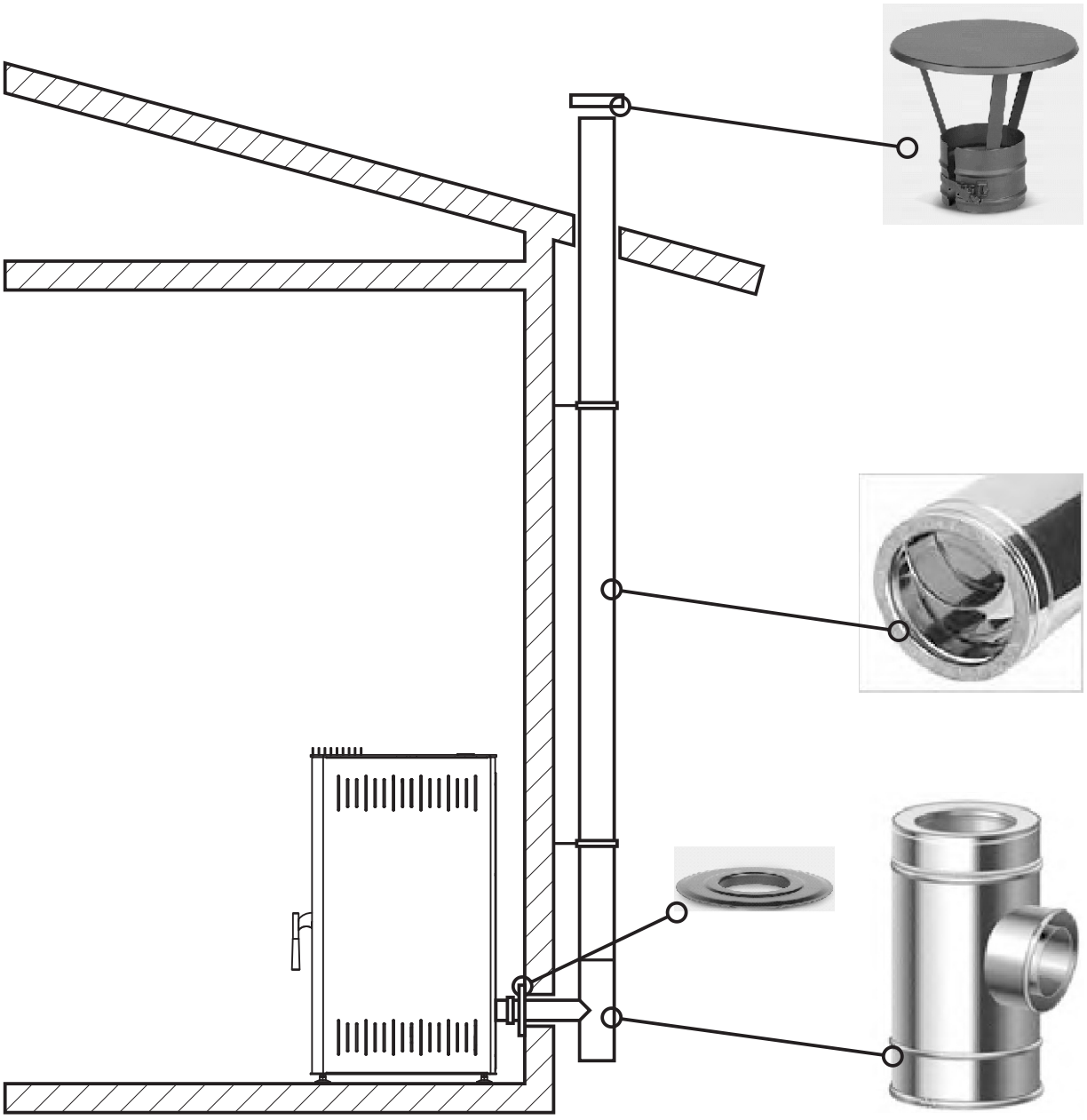

Connection to Internal Chimney

Image 7 shows the correct way to connect the stove to the internal chimney. 80 mm diameter flue ducts are used for connection within a room. The ducts do not have to be insulated, but it is important to provide adequate sealing at the duct connections.
A condensation system is also mandatory to avoid problems in operation. The top of the chimney must be fitted with a cap for rain and wind protection, and if the chimney is exposed to outside conditions, it must be insulated.

Image 7

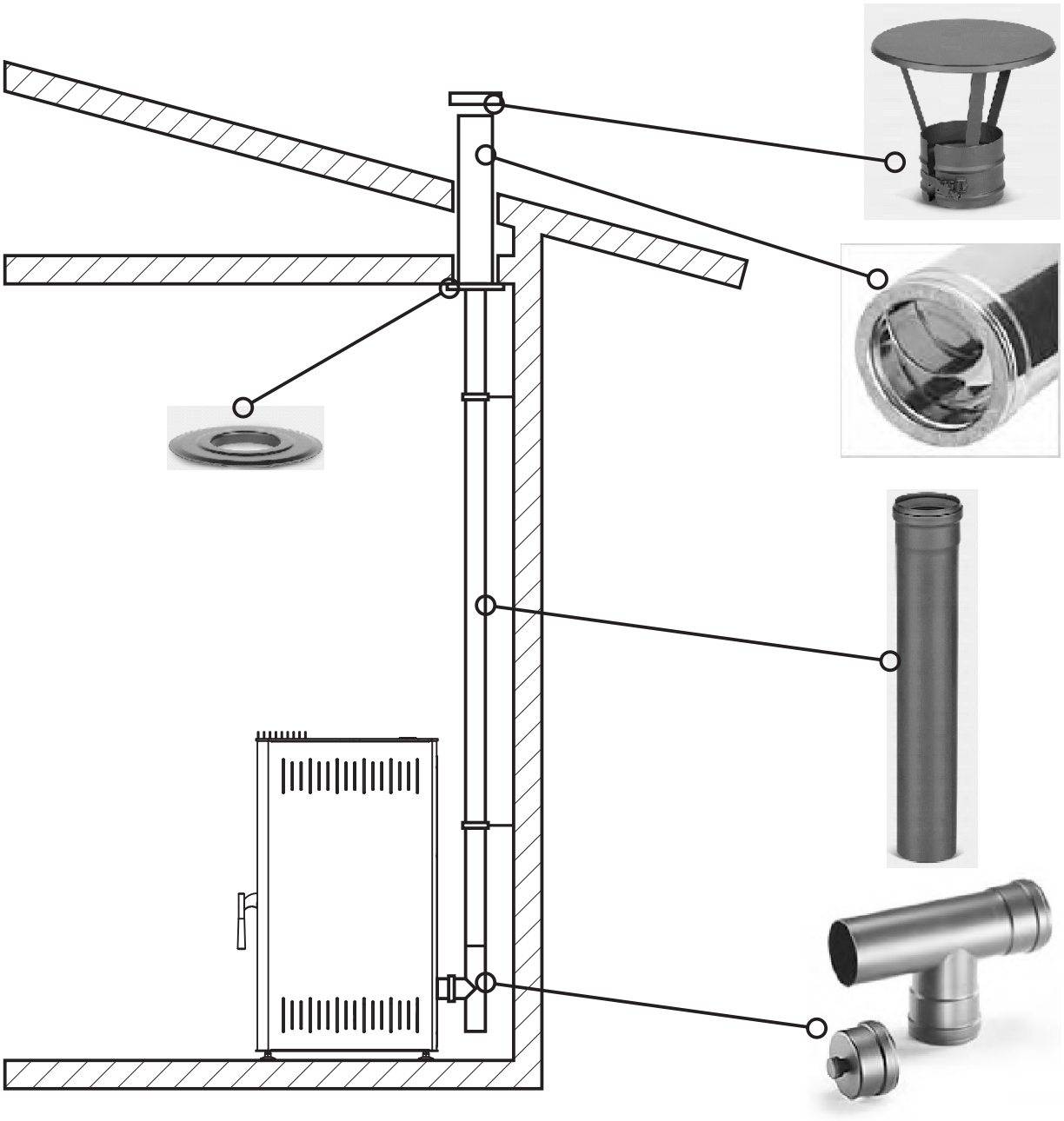

Connection for a Combination of Internal and External Chimney

Image 8 shows the stove installation with a combination of internal flue ducts and an external chimney.
The external chimney must be insulated, the top must be fitted with a cap for rain and wind protection, and it must have a condensation regulation system.
The internal flue ducts do not have to be insulated, they must have adequate sealing at the joints. It is very important to place a rosette (chimney plug) on the wall and seal it tightly so that it does not leak smoke, if the smoke comes in contact with the wall, the reaction may result in staining. A condensation system on the flue ducts is also required.

Image 8

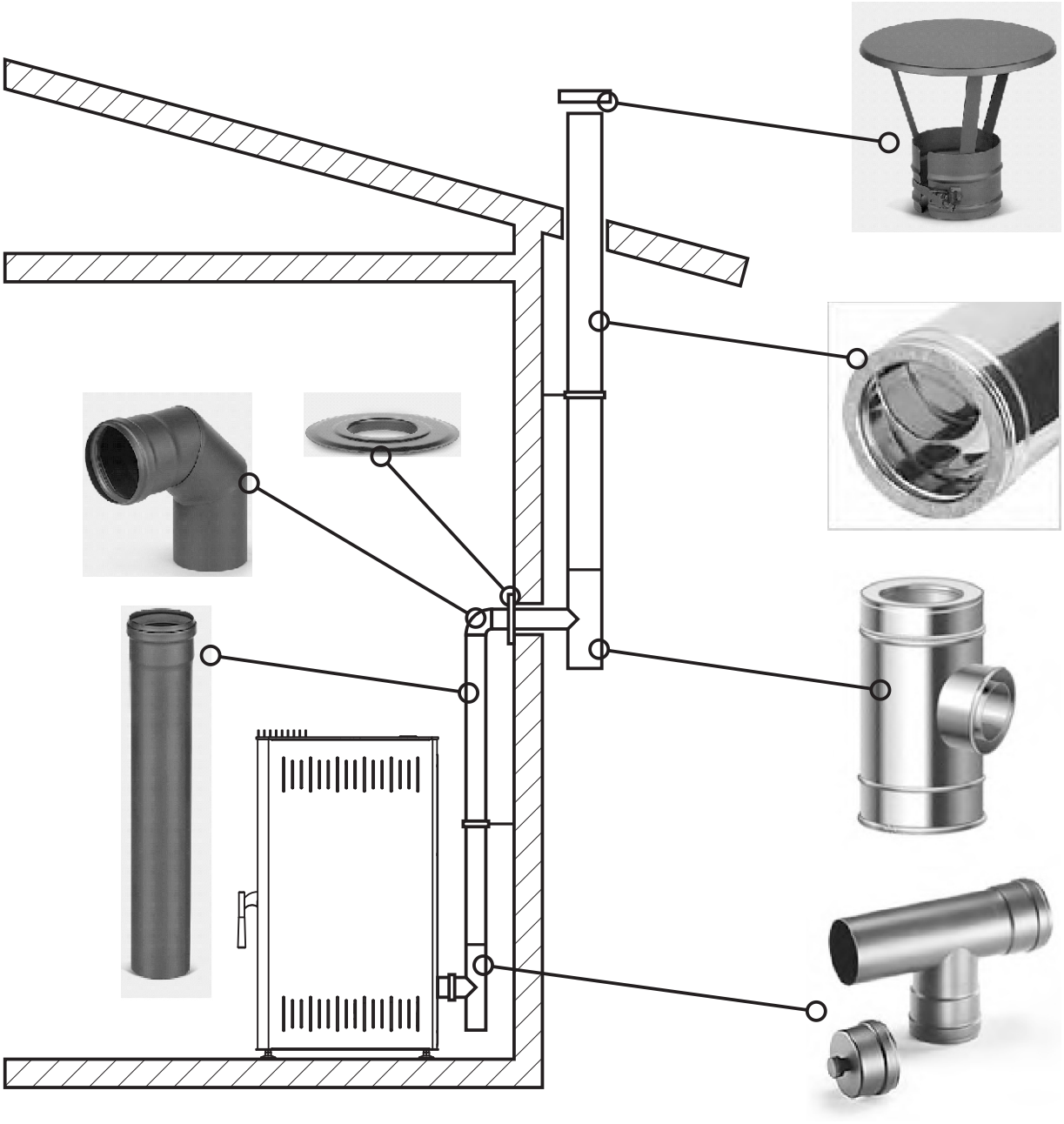

Note:

If the flue ducts are installed without a tee connector and the condensation container as in Image 9, you must prevent condensation and dust accumulation in certain zones of the flue curves.
This type of stove installation is allowed with mandatory regular maintenance and cleaning of flue ducts. Otherwise, described problems may occur due to chimney clogging.



Tee Connector **Image 9**

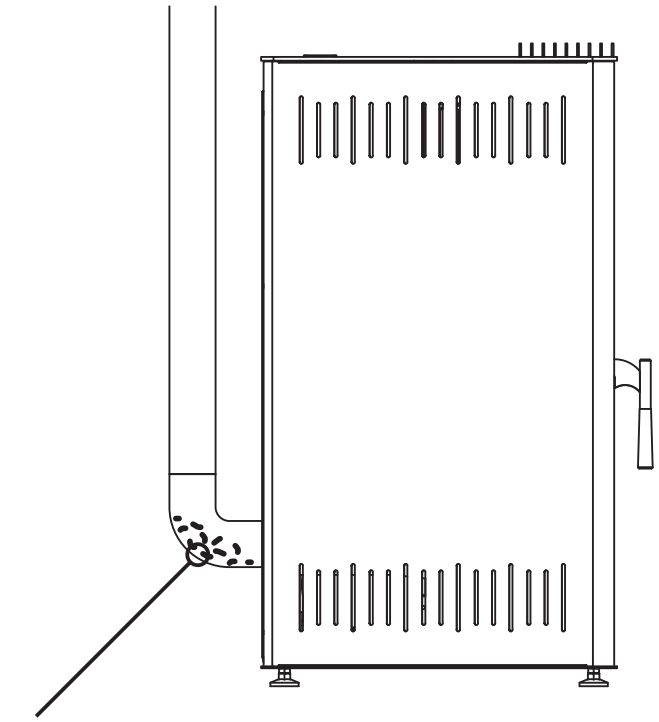

Condensation and dirt accumulation

Image 10 shows how to install the stove to a masonry chimney (1). The masonry chimney must Condensation and dirt accumulation be fitted with an inspection fitting for cleaning (2) and rain and wind protection (3).
Above are some of the examples which often occur, it is important to have the stove installed by a person with expertise in stove and chimney installation.

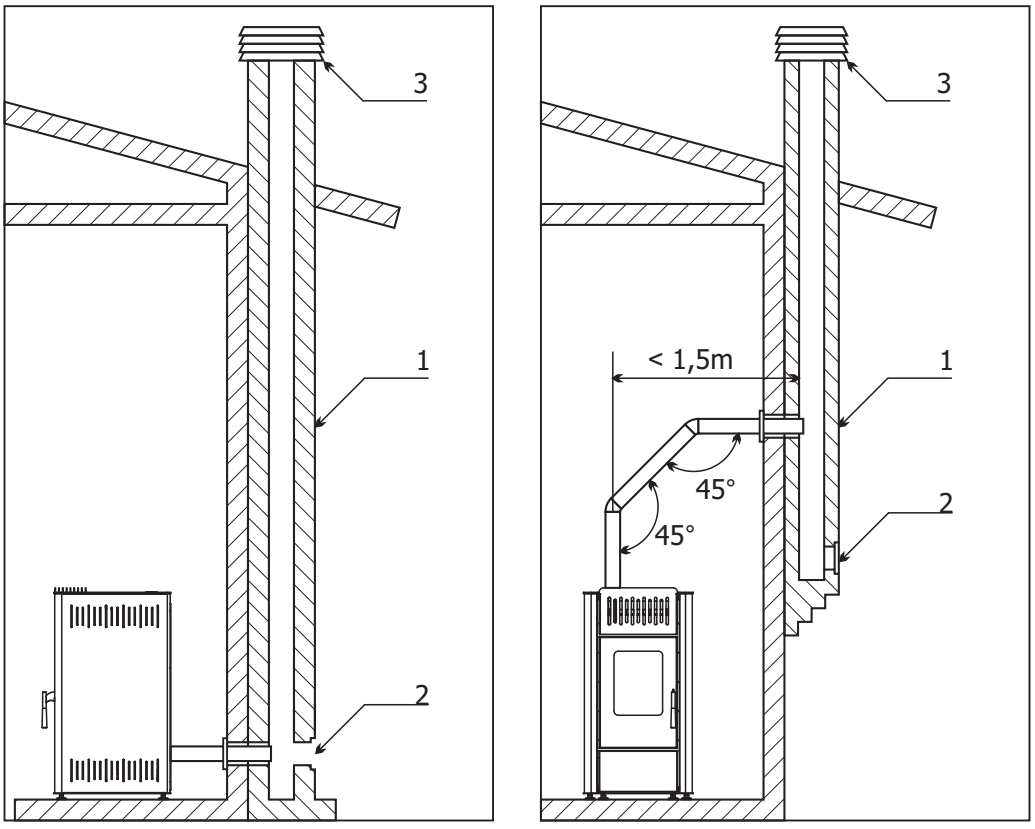

Image 10

6. STOVE COMMISSIONING – OBLIGATION OF THE AUTHORIZED PERSON

After the stove had been correctly installed according to the requirements and regulations, the stove will be put into operation. Please observe the following advices:

- During the first commissioning, the painted parts of the stove will burn, which will cause a certain amount of smoke and unpleasant odor. Therefore, you must provide good air circulation in order to ventilate the room and remove unpleasant odors as soon as possible.
- During the first commissioning, we recommend to have a professional present for at least 30 minutes and have his assurance that all requirements for the safe operation of the stove have been met.
- Make sure to check if the stove is properly connected to power and the chimney, that it is at a safe distance from flammable materials, that it had high quality pellet and sufficient inflow of fresh air.
- Make sure to check whether the probe measuring the room temperature is not in contact with or near a heat source, because if it is, the stove will not have the correct information about the room temperature. We recommend placing it 10 cm from the floor and away from the flue that is heated during the stove operation.
- When all conditions are met, set the switch (shown in Image 4 under number 16) to position 1. Then follow the instructions from section “Handling and Operating the Stove".

7. STOVE CLEANING AND MAINTENANCE

Stove cleaning is a key factor for proper functioning.
By ignoring this procedure, there is a risk of a number of issues that may occur. The stove should be cleaned only when it is disconnected from the power and when the stove and ash are completely cold.
Stove maintenance can be performed on a daily, weekly, monthly and annual basis. All levels will be explained in detail below and users must strictly adhere to these advices and recommendations so not to invalid the product warranty and to prevent possible damage to the product and the environment.

7.1. Daily Stove Cleaning:

This refers to the daily maintenance of the stove, which is minimal. The daily maintenance includes removing the ash from the stove fire-pot in the firebox, cleaning the fire-pot, cleaning the area around the fire-pot, cleaning the glass, cleaning the pellet storage. Ash is removed with a vacuuming device (vacuum cleaner), when the stove is completely cold.
Clean by opening the firebox door, then removing the cup (Image 11) and ashtray (Image 12) and emptying all the contents.

All fire-pot openings must be cleaned to ensure good air circulation necessary for proper combustion. After that, all the dust from the firebox and the space around the fire-pot must be vacuumed.

If the pellet is of low quality, a layer of slag will form because the pellet did not burn, and such pellet may produce resin at the bottom of the fire-pot. If the fire-pot is not properly cleaned, the fire-pot will overload and the stove may self-ignite. **It is also very important to properly return the fire-pot in place.**

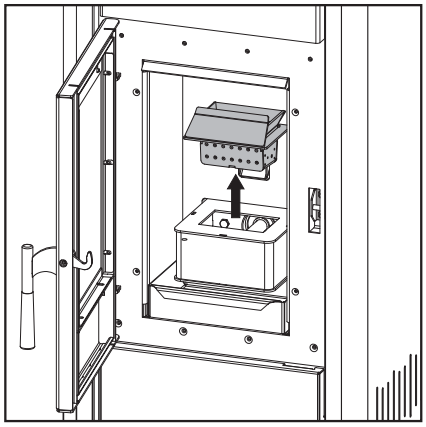

Image 11

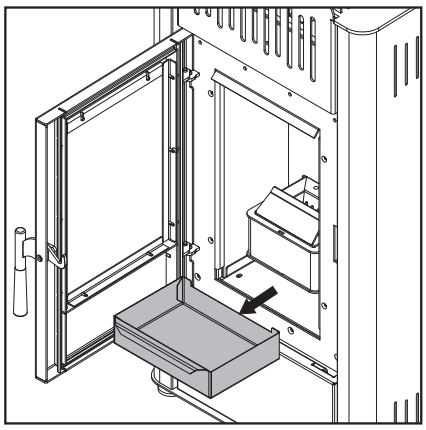

Image 12

The stove glass must be cleaned with a dry cloth.
If needed, you may use water and mild detergents, but only if the glass is cold. **If the glass is hot, it may crack in contact with water.**
Abrasive agents can damage the glass. The glass must be completely dry before starting the stove again.

Pellet storage cleaning is performed by vacuuming the residual dust coming from the sack along with the pellet.
If the dust inserted along with the pellet accumulates at the bottom of the storage and reaches the dispenser in sufficient quantity, it may cause the dispenser to clog.

7.2. Periodic Stove Maintenance:

It refers to the cleaning of flue ducts in the firebox.
It is recommended that this period be one month and that this period be shortened or extended if necessary (the length of this period is significantly affected by the quality of the pellets).
In order to access the flue ducts, it is necessary to remove the turbine cover (picture 13), which is located under the ashtray at the bottom of the combustion chamber and which is attached with 4 screws that can be unscrewed with a Phillips screwdriver.
Next, the top and side vermiculite plates covering the firebox should be removed. First you need to lift the top plate to release the side railsare then taken out of the combustion chamber (pictures 14 and 15), and then the upper vermiculite plate is taken out (picture 16).
The vermiculite sheet on the back of the firebox should not be removed.
After that, you should use a vacuum device to suck up all the dust from the side surfaces/ribs, from the bottom of the combustion chamber and from the turbine area.

7.3. Wool Braid

We recommend changing them after the heating season because they maintain the sealing of the stove. They are located on the firebox door, the cleaning lid, the combustion fire-pot and on the ashtray.
After prolonged use, the glass braid may come off.
If this happens during the heating season, and the braid was not worn out, it is possible to attach it with silicone resistant to high temperatures. Other braids (flat) are self-adhesive and do not require silicone, but should be replaced with a braid with the same characteristics.
Glass braids are consumables and are not subjectto regular service.

Failure to return the fire-pot, cleaning lids and ashtray properly and according to the instructions may cause overloading and poor combustion of the pellets.
If the fire-pot overflows, turn off the stove immediately and, after cooling, clean as explained in the instructions or call for service.

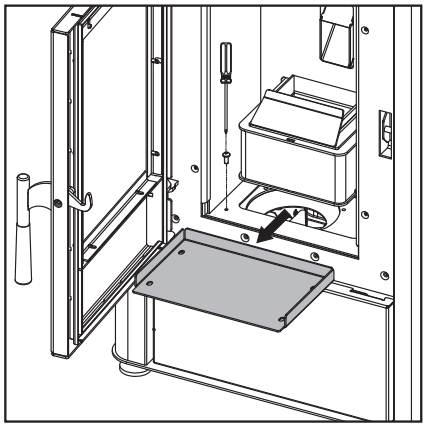

Slika 13

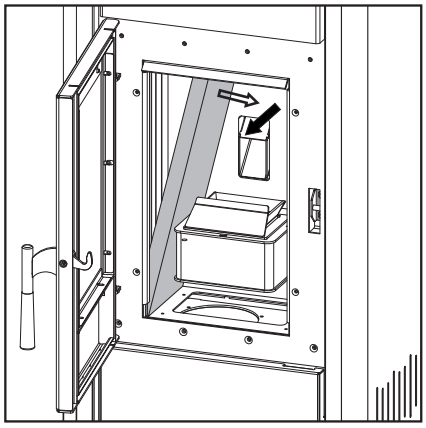

Slika 14

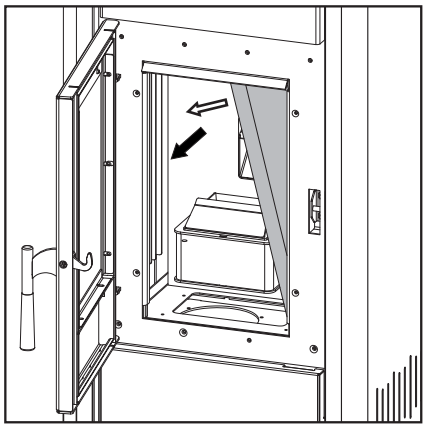

Slika 15

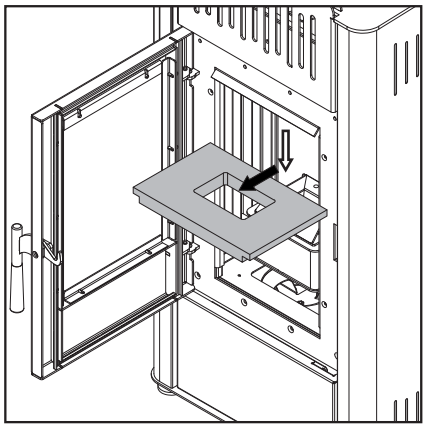

Slika 16

8. THE PELLET

Description:
Pellet is a product obtained by pressing sawdust from dry, high-calorie wood. Sawdust is subjected to high pressure where it heats up and creates a natural binder.
No additional binders are allowed during pressing.
As a pure biomass product, the pellet is CO_2 neutral, i.e. it does not contribute to the greenhouse effect. Wood as the basic ingredient of pellets is a renewable energy source and the fuel of the future.

This stove uses pellet of 6 mm in diameter and 10-25 mm in length, otherwise issues may occur in the operation of the stove.
The pellet quality is defined by the DIN 51731 standard.

Pellet characteristics:
Pellet length 10-25mm
Pellet diameter ..... ≤6mm
Load density ..... 650kg/m^3
Energy value 5kWh/kg
Moisture 6-8%
Ash ..... <1,5%
Specific weight ..... >1kg/dm^3

Use of pellet in MBS stoves:
We recommend procuring the pellet from authorized pellet distributors and manufacturers who can guarantee for the pellet quality. The pellet should be stored in conditions prescribed by the manufacturer. In case the pellet becomes wet, certain issues may occur in the operation of the stove. If you buy pellet made of low-quality wood that contains resin, the stove will not function properly. Some of the operating issues are:
- Large quantity of dust
- The stove quickly becomes dirty and needs frequent cleaning
- The fire-pot is not completely cleaned during stove operation
- The fire-pot overloads
- The glass quickly becomes dirty and black
- Inadequate combustion in the firebox
- Dispenser clogging
- Vacuum in the storage due to the pellet sticking to the pellet storage walls

Should any of the above occur, **Smederevac d.o.o.** shall not be found liable.

9. HANDLING

The control panel (Image 11) enables communication with the program selection via keys. The display and the indicators (on the LCD display) inform the operator on the stove operation.

LEGEND

Keys:
1 - temperature increase and program function for changing the day, time temperature
2 - temperature decrease and program function for changing the day, time temperature
3 - program change SET
4 - ON/OFF, exit program
5 - heating intensity decrease
6 - heating intensity increase

Control panel central section display:

7 - clock – programming active .....
8 - heater - heater activated .....
9 - pellet diagram view - fuel supply active .....
10 - turbine - exhaust fan active .....
11 - fan - fresh air fan active .....
12 - pump - not installed for this stove type (installed in boiler stoves) .....
13 - alarm indicator .....
14 - clock
15 - room temperature indicator
16 - operation mode indicator (P1, P2,...P5)
17 - stove operation information

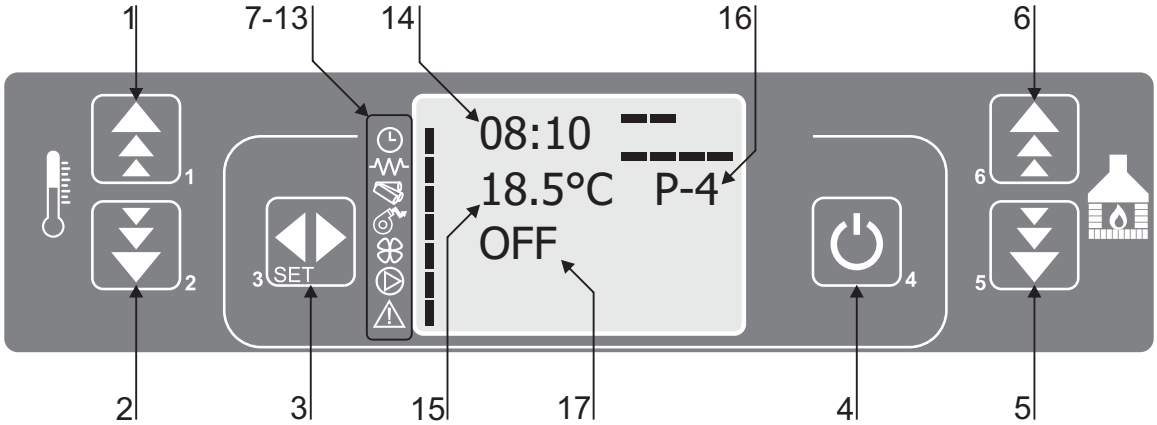

Image 17

9.1. Stove commissioning

Once the stove is connected to power set the power switch located at theback of the stove to position 1.
The display will show the following messages: time, room temperature, heating intensity value (from P1 to P5) and OFF - the stove is not in function (image 18).

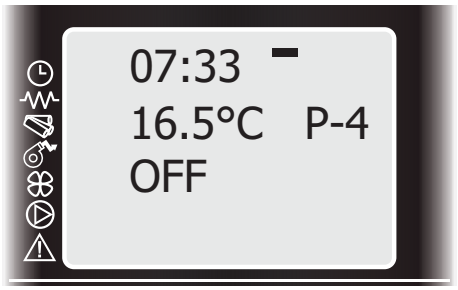

Image 18

Hold key 4 (ON) for several seconds. When the display message changes from OFF to START, the stove will start operating (Image 19) and the heater is activated followed by message LIGHTER WAIT (Image 20).

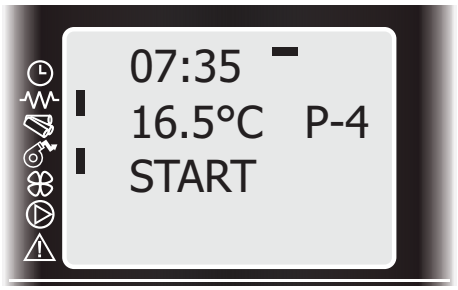

Image 19

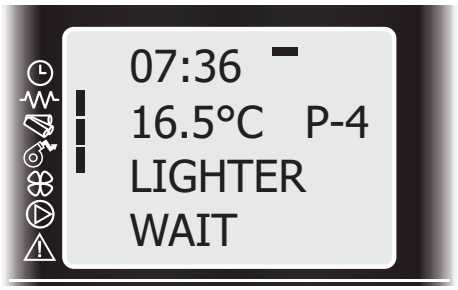

Image 20

After that, the messages LIGHTER WAIT (lighter starting) LOAD PELLET and FIRE WAIT (Images 21 and 22) appear alternately indicating that the stove has been loaded with pellet which was inserted into the burner and the fire is expected to be lit in the firebox.

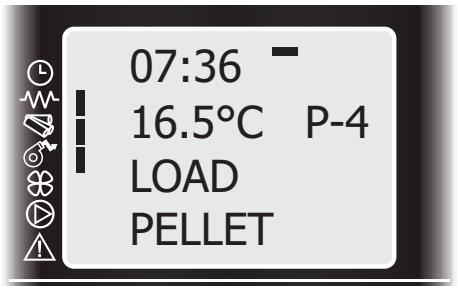

Image 21



Image 22

Once the flame is lit in the burner and the exhaust gases' temperature is achieved, the lighter is turned off and the display shows the message FLAME LIGHT (Image 23).

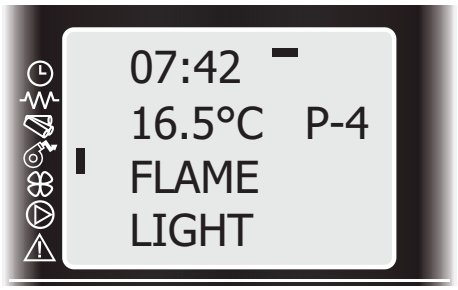

Slika 23

Once the flame is stable, the display shows the message WORK (Image 24).

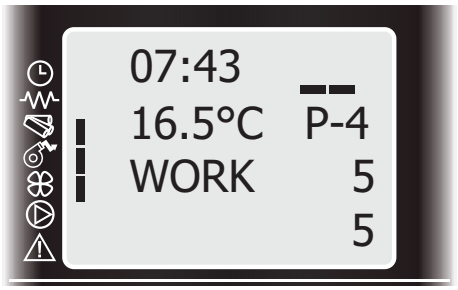

Image 24

When the stove is in a stable process, the pellet feed intensity is decreased and the burner fire-pot is cleaned from the unburned pellet every 10-15 min. for 40 -70 seconds followed by the display message CLEANING FIRE-POT (Image 25).

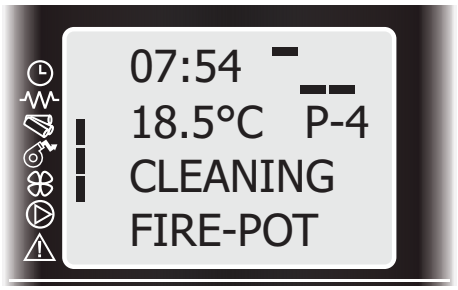

Image 25

9.2. Adjusting the heating Intensity (heating power)

Keys 5 or 6 are used to select the desired heating intensity, which can be read from the display showing the message SET POWER and the values from 01 to 05 (Image 26). The highest heating intensity is 05.

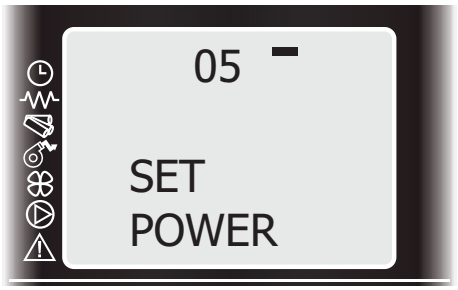

Image 26

9.3. Adjusting the room temperature

Press key 1 or 2 to set the desired room temperature you want the stove to achieve. The display will show the current room temperature at it will read SET TEMP ROOM (Image 27)

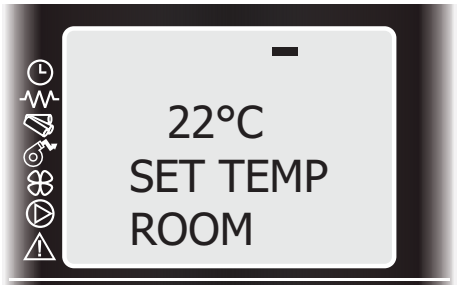

Image 27

9.4. Achieving the desired temperature during operation

Once the set room temperature is achieved, the stove goes to the economy mode where it saves fuel, and the display shows the message WORK MODULAT (Image 28).

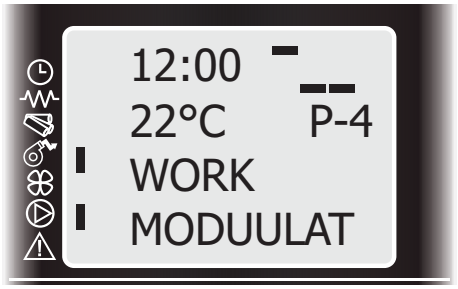

Image 28

9.5. Turning the stove off

Turn off the stove by pressing key 4 for 4 seconds.
The feeder stops working, the exhaust fan stays on for about 10 minutes until the exhaust gases' temperature drops below the set value, while the flame is extinguished and the stove temperature is lowered. Also, the fresh air fan additionally blows out the air until the stove cools down. This activity is followed by the display message CLEANING FINAL, which includes indicators that the fan is running (Image 29).

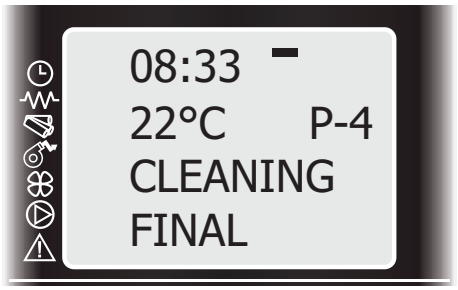

Image 29

Once the stove has cooled down, the fans stop working and the message OFF appears on the display indicating that the stove has been turned off (Image 30).

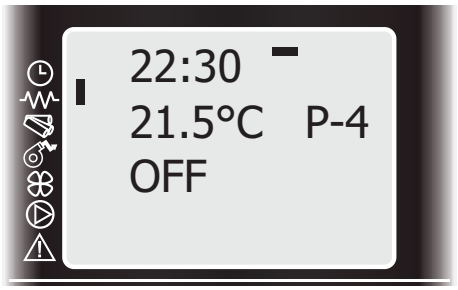

Image 30

It will be possible to restart the stove 5-7 minutes after it was turned off.

9.6. Starting the spiral and the dispenser without starting the stove due to lack of pellet

If the stove turns off due to the lack of pellet in the storage and the dispenser, the display will show the corresponding message and alarm (more details in chapter "Alarms").
In this case, the pellet dispenser spiral is emptied and the stove may not immediately start when starting again because of a small amount of pellet.
To avoid restarting the stove twice, use the option LOAD INITIAL to start the dispenser spiral and loading the pellet without starting the stove. LOAD INITIAL option can't start until the display reads OFF! The starting option process is as follows: load the pellet into to storage via LOAD INITIAL command (Image 31) and load the dispenser.

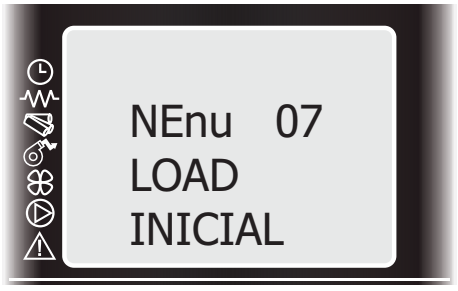

Image 31

The LOAD INITIAL command is in menu 07, it can be reached by pressing the SET key, and then use key 5 to get to menu 07 and press the SET key again and the upper section will show the option OFF (Image 32).

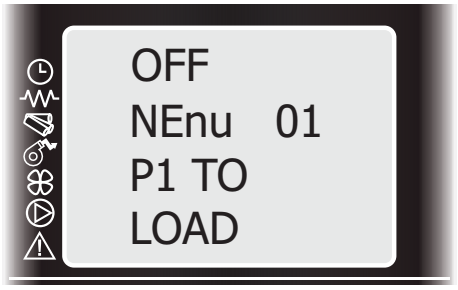

Image 32

Then use key 1 to start the spiral (the exhaust fan will also start) for 90'' (Image 33).

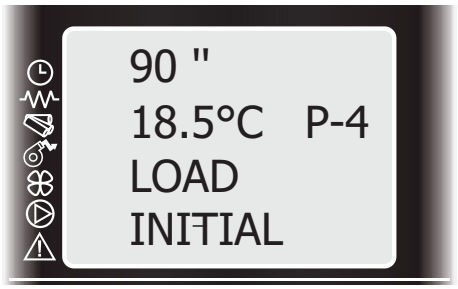

Image 33

Stop the dispenser by pressing the key 4. Once the pellet starts loading into the fire-pot it will mean that the dispenser is loaded and the stove can be started according to description in chapter 1. The spiral can be started with this option if the pellet is blocked until it unblocks.

9.7. Remote Control

You can use the remote control (Image 34) to turn the stove on and off (key 3), set the temperature (thermometer symbol - keys 1 and 2) and the heating capacity (fire symbol - keys 6 and 5) and to enter the menu (key 4).

Symbol + is for increasing, and symbol – is for decreasing the temperature and the capacity.

The remote control uses the **CR2015(3V)** battery.
The remote control range is 2.5 m.



Image 34

9.8. Display Clock and Date Setting

The pellet stove can be turned on and off during the day and this is regulated by programs.
In order to program the stove, you must first set the clock and date on the control unit display. To do this you need to enter the time and date setting menu.
Press the SET key and use key 5 to get to the menu 02 (Image 35).

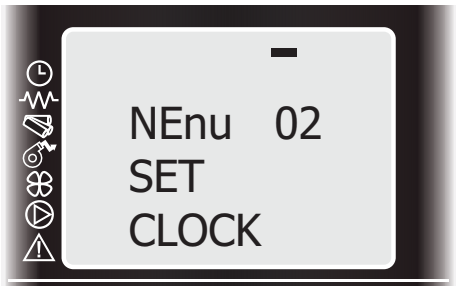

Image 35

Press the SET key and use key 1 or 2 to set the weekday - MONDAY, TUESDAY... (Image 36).
Press the SET key and use key 1 or 2 to set the hours on the clock (Image 37).

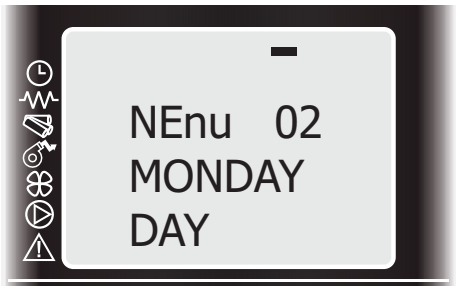

Image 36

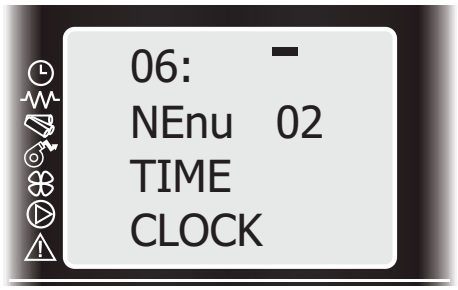

Image 37

Press the SET and use key 1 or 2 to set the minutes (Image 38).

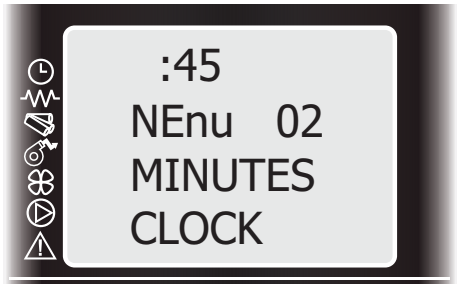

Image 38

Press the SET and use key 1 or 2 to set the day in the month (Image 39).

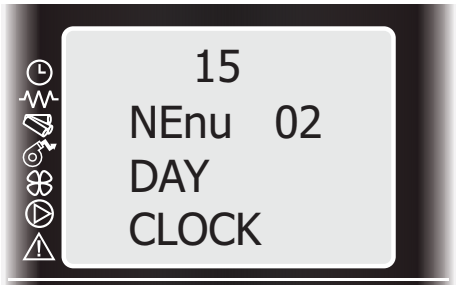

Image 39

Press the SET and use key 1 or 2 to set the month (Image 40).

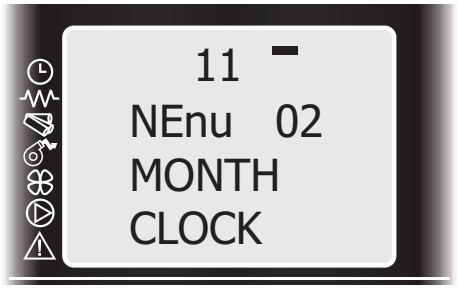

Image 40

Press the SET and use key 1 or 2 to set the year (Image 41).

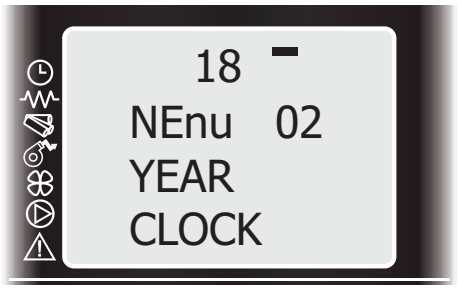

Image 41

Once this setting is done go back to the start menu by pressing the key 4.

9.9. Language Setting

The boiler control unit can be programmed in 7 languages (English, Italian, Serbian, Spanish, French and German). The user can change the language in his user menu.
To change the language, press the SET key and use key 5 to reach menu 4 (Image 42).



Image 42

Press the SET key and use key 1 or 2 to select the language: English, Italian, Serbian, Spanish, French and German (Image 43).

Press key 4 twice and return to the start screen.



Image 43

9.10. Stove Operation Programming

There are 3 types of boiler programming:
- Daily programming
- Weekly programming
- Weekend programming

The following describes each individual programming.

Daily Programming

The stove can be turned on and off twice if desired, and this is regulated by the programs, noting that enough time is needed between turning off and re-starting the stove to cool down.
First, you need to set the time and date (as described in chapter 6). The later on/off functions of the stove depend on this action, so set the correct time.
Press the SET key and use key 5 for menu 03 (Image 44).



Image 44

Press the SET key, the display screen is as in Image 45.

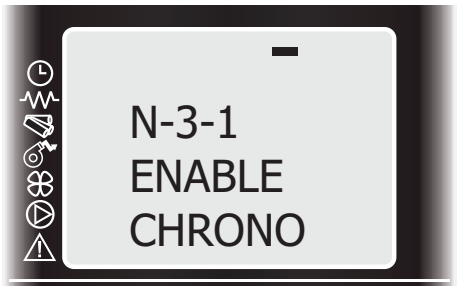

Image 45

Press the SET key, the display screen is as in Image 46.

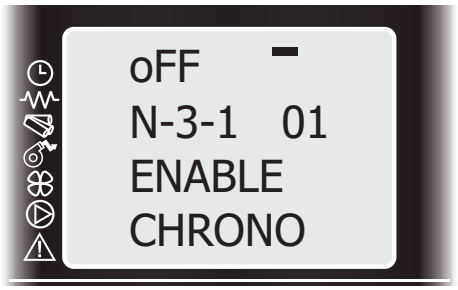

Image 46

Press key 1 to turn on the chronometer (On) as shown in Image 47.

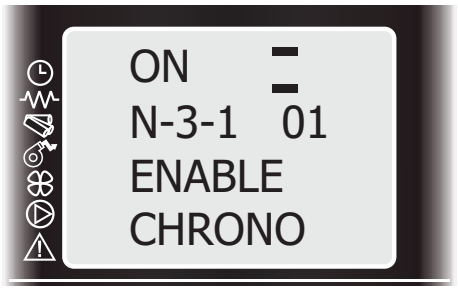

Image 47

Press key 4 and then key 5 and the display will read as in Image 48.

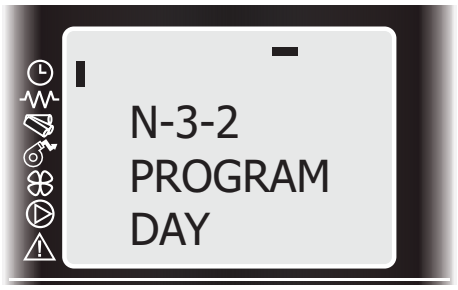

Image 48

Press the SET key and then key 1 to activate the daily programming (On) as shown in Image 49.

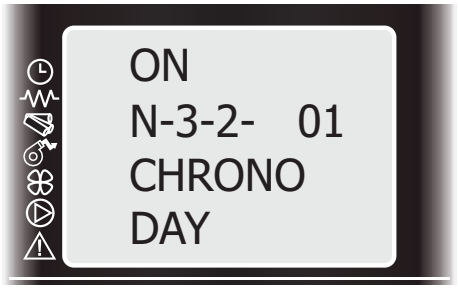

Image 49

Press the SET key twice and the display will read as in Image 50.

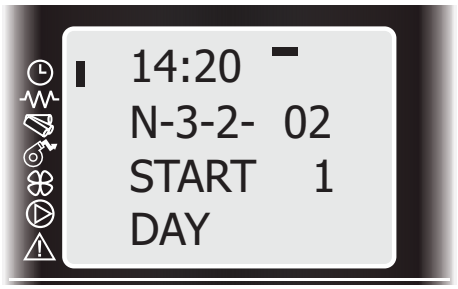

Image 50

Use key 1 or 2 to set the time of first stove ignition during the day.
Press the SET key for the display to read as in Image 51 and the key 1 or 2 will set the time of the first stove shutdown.



Image 51

Press the SET key go set another program.
Use key 1 to set the time for stove ignition (Image 52).

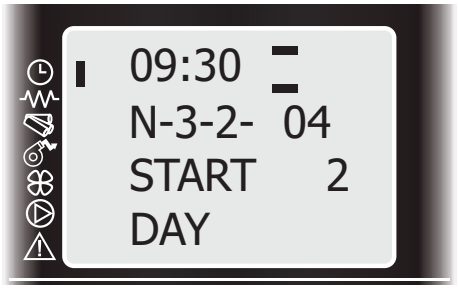

Image 52

Press the SET key and set the stove shutdown time (Image 44). Once the final setting with key 4 is done, we go back to the main menu and the display will indicate that the programming is active.



Image 53

Weekly Programming

The weekly program has 4 programs (4 off/on timings). These 4 programs can be individually combined for each day of the week, i.e. if some of them will be active or not (OFF or ON).
Make sure to set these programs carefully to avoid on/off time overlaps.
The programming process: the first 4 programming steps are the same as for the daily program setting (Images 44-47).
Press key 4 and then press key 5 twice and the display will read as shown in Image 54.



Image 54

Press the SET key and then key 1 and activate the weekly programming (On) (Image 55).



Image 55

Press the SET key and then use key 1 to set the stove ignition time in the first program (Image 56).

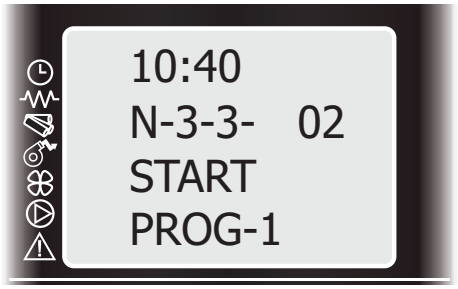

Image 56

Repeat the same process and set the stove shutdown time in the first program (Image 57).



Image 57

Press the SET key and use key 1 to activate (ON) or deactivate (OFF) the program 1 for the corresponding weekday from Monday to Sunday as shown in Image 58 and Image 50.
Switch from day to day by pressing the SET key.



Image 58

Press the SET key to go to setting another program and activating it for each day of the week individually (in the same way as it for program 1).
Do the same for the remaining two programs (programs 3 and 4).
The indicator that programming is activated will be shown on the display.

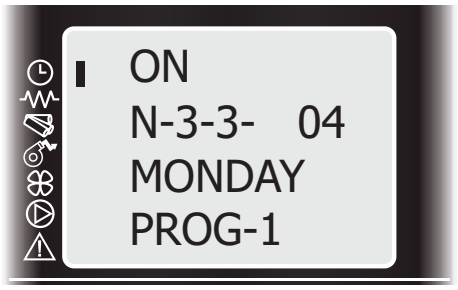

Image 59

Note:
Deactivate the daily program if you want to use the weekly programming.

Weekend Programming

Weekend programming allows you to program, turning the stove on and off (twice during the day) during the weekend (Saturdays and Sundays).
Activate the weekly programming only if daily and weekly programming is deactivated. The first 4 programming steps are the same as for the daily program setting (Images 44-47). Press key 4 and then key 5 three times and the display will read as shown in Image 60.



Image 60

Press the SET key to activate the weekend program as shown in Image 61.

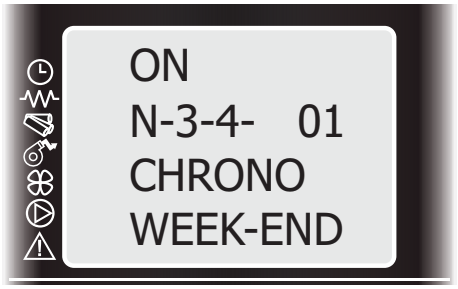

Image 61

Press the SET key and key 1 to set the of the first stove ignition as shown in Image 62.



Image 62

Press the SET key again and use key 1 to set the time for stove shutdown and the display will read as in Image 63.



Image **63**

The same process is used for programming another weekend program (Images 64 and 65).
After these setting, go back to the main menu by pressing key 4.



Image 64



Image 65

9.11. Stand-by Mode Programming

The stand-by mode is practically a type of a thermostat. When operating the stove, if the room temperature is set at 22°C, the stove will operate in the set mode until it reaches this temperature.
Once it reaches this temperature, the stove will automatically reduce the mode, but it will not turn off and will continue to work (this is the factory setting). So, even when it goes down to the lowest operating mode, the stove will continue to heat and work, thus exceeding the set temperature, which will rise linearly.
The stand-by mode prevents this from happening. When this option is on, the stove operates in the set mode until it reaches 2 degrees higher than the set temperature, when this happens it automatically switches off the stove and starts cooling it. When the stove cools down to -2 degrees below the set temperature, the stove restarts automatically. Once the stove reaches the set temperature, it enters the cooling phase when the command ATTESA RAFFRED is displayed.

Note: When the stove reaches a higher or lower temperature than the set one, it does not turn off and does not start immediately, but has its own time interval that it needs to react.

Note: The stove must be cleaned more often when this command is on.
We recommend observing the stove operation for one day when the command is turned on to see how much dust and ash is generated and clean it based on that because it directly depends on the pellet, the room being heated and the set temperature, so this situation is based on the individual user.

Turning on the Stand-by Option:

To activate the stand- by mode option, press the SET key and use key 5 to go to menu 05 as shown in Image 66.

Press the SET key and enter menu 05 (Image 67).
Use key 1 or 2 to select ON (Image 68) which will turn this option on.

Press key 4 twice and return to the start screen.

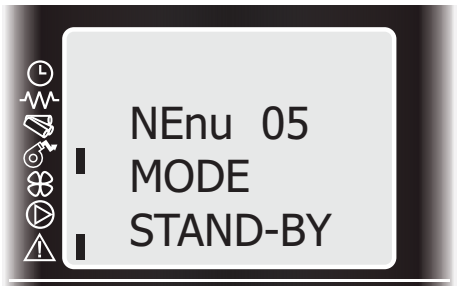

Image 66

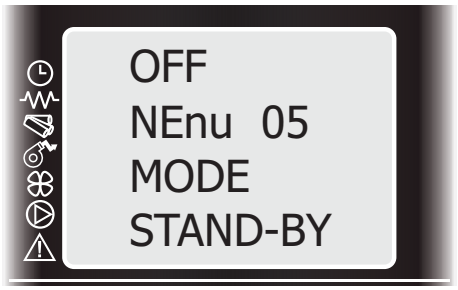

Image 67

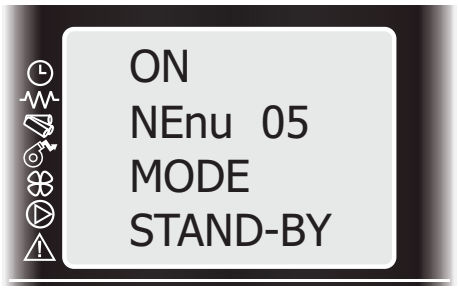

Image 68

9.12. Pellet Type

TYPE PELLET option (the pellet type) enables you to decrease or increase the pellet load.
Depending on the pellet quality, you can correct the pellet dose in all modes. If the user determines that the burner fire-pot becomes overloaded during combustion, but the boiler was cleaned according to the instruction, then the user can correct it by decreasing the pellet during dosing.
To change it, press the SET key and use key 5 to enter menu 10 (Image 58).

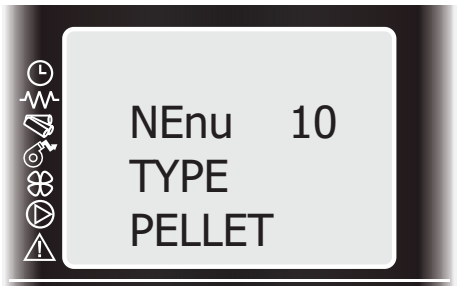

Image 69

Then press the SET key and enter menu 10 as shown in Image 70.
The upper section shows the value 00, meaning the correction wasn't set.
Use key 1 or 2 to set the correction by selecting a correction between 00 and 09, and between 00 and -09 .

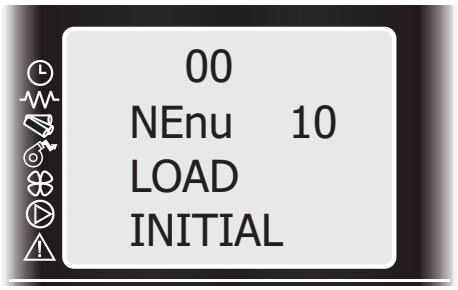

Image 70

If you set it to 01, this means that the pellet loading was increased by 2%, when set to 02 the pellet loading is increased by 4%, if the number is 03 the loading is increased by 6% and so on up to 09 and the max value of 18%.
The same procedure is for decreasing the pellet, but the values go from -01 to -09 (Image 71).

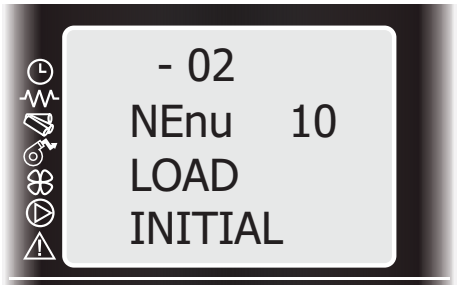

Image 71

The correction percentages refer to the factory set operation modes.
Exit the correction setting by pressing the key 4 twice and returning to the start screen.

9.13. Stove cleaning warning message:

Once the time period was defined by the program, the display will show the message for the monthly product cleaning - clean the stove (Image 72).



Image 72

This message does not affect the operation of the stove, but it is shown on the display until it is canceled by simultaneously holding down keys P1 and P6 for a few seconds.The service menu monitors the time when the cleaning message appeared and this will show whether the boiler was cleaned after the message appeared.

Note: Failure to maintain the stove can be the cause of many operating problems, so the message serves as a reminder and warning to clean the stove on time and in the manner shown in the part of the instructions intended for product maintenance.
Any report of an unfounded complaint to an authorized service will be charged additionally.

10. ALARMS

Malfunctions are accompanied by the sound of alarms and the messages on the display that is related to the resulting malfunction.
Malfunctions may occur due to exhaust gases' temperature being higher than prescribed, improper operation due to the aspirator temperature probe, flue problems, in case the pellet does not ignite during the ignition phase, in case of pellet shortage, in case of power failure, in case of stove shutdown.
When turning on the stove for the first time on the O/I switch, on stove back, or in the event of power failure, the alarm may be activated as shown in Image 73.

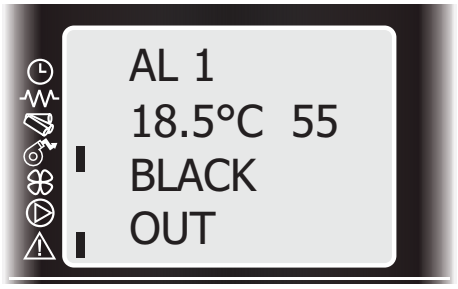

Image 73

You must cancel the alarm by pressing the key 4 during several seconds and the display will read as in Image 74. Now both fans will turn on and the stove will be ventilated for 10 minutes. After this process, the display will read as in Image 75 and the stove will be ready to restart.

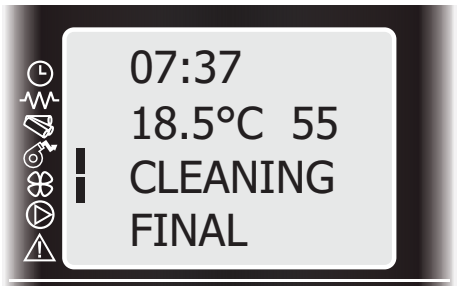

Image 74

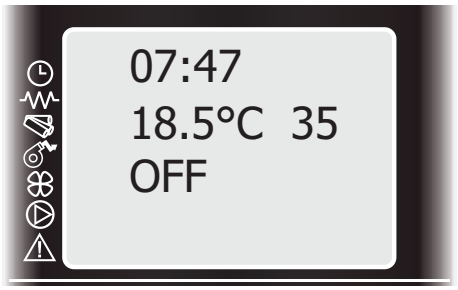

Image 75

Every time the alarm appears, the display will read ATTESA RAFFRED (Image 76) indicating that the alarm will continue, and you can cancel it by pressing the key 4 for several seconds.



Image 76

ALARM TABLE:

On-screen indication	**AL 2 / PROBE EXHAUST - *AL 2 / SONDA IZD.GASO***
Description	It is connected to the exhaust fan and constantly checks the exhaust gases' temperature to have the stove work properly.
When is it activated	It is activated when the controller cannot read the exhaust gas' temperature. • After approximately 30 seconds you will hear a sound signal (if activated).
What to do	Turn off the stove by pressing the ON/OFF button for several seconds. • The sound signal stops. • After cleaning the stove, restart it by pressing the ON/OFF button.
On-screen indication	**AL 7 / SAFETY THERMAL - *AL 7 / SIGURNOS TERMOSTA***
Description	It is connected to the boiler and constantly checks the temperature inside the boiler burner, in order to operate safely.
When is it activated	If the temperature exceeds a predetermined critical limit, then the thermostat interrupts the power supply to the dispenser. Accordingly, the dispenser stops rotating, making the pellet to stop loading and the boiler to turn off. • The screen shows the indication ALARM safety thermal. • After approximately 30 seconds you will hear a sound signal (if activated).
What to do	• Turn off the boiler by pressing the ON/OFF button for several seconds. • The sound signal stops. • Wait to make sure the remaining pellet in the burner completely burned. • Locate and eliminate the cause of the safety device intervention (clean the duct within the boiler and the flue duct). • Wait until the boiler is cold and turn on the thermostat again (pos. 11, Image 18). • After you clean the boiler, restart it by pressing the ON/OFF button.
On-screen indication	**AL 5 / NO LIGHTNING - *AL 5 / NEMA PLAMENA***
Description	The flame did not ignite.
When is it activated	The stove didn't detect the flame within the given time interval.
What to do	Turn off the stove by pressing the ON/OFF button for several seconds. • The sound signal stops. • Clean the stove. • Check the pellet quality. • Restart the stove by pressing the ON/OFF button.
On-screen indication	**AL 8 / FAILURE DEPRESS - *AL 8 / ZAPUSENA PEC***
Description	It is connected to the chimney. Its purpose is to check the vacuum inside the flue, to ensure the safe operation of the stove.
When is it activated	If the conditions for uninterrupted and safe operation change on the chimney (due to incorrect installation, obstacles, poor maintenance or extreme weather conditions, e.g. strong wind), then the pressure switch intervenes and interrupts the power supply to the dispenser. Accordingly, the dispenser stops rotating, thus the pellet stops loading and the stove shuts down. Failure depress indication appears on the screen. After approximately 30 seconds,

What to do	you will hear a sounds signal (if activated). Turn off the stove by pressing the ON/OFF button for several seconds. • The sound signal stops. • Wait a while and check if the remaining pellet finished burning in the burner. • Wait for the stove to cool down. Then locate and eliminate the causes of the safety device intervention (possible issue with the chimney). • Finally, after cleaning the stove, restart it by pressing the ON/OFF button.
On-screen indication	**AL 6 / NO PELLET - *AL 6 / NEMA PELETA***
Description	It is connected to the burner.
When is it activated	If the pellet stops loading to the stove firebox. This will cause the burning to stop and the stove shuts down.
What to do	Turn off the stove by pressing the ON/OFF button for several seconds. • The sound signal stops. • Turn off the stove. • Check if the pellet storage is empty, if yes, load the pellet and restart the stove. • If it is not empty, contact the service center for consultation.
On-screen indication	**AL 4 / FAN FAILURE - *AL 4 / TURBINA PROBLEM***
Description	There is no communication between the power card and the exhaust fan.
When is it activated	The power card does not read the exhaust fan data (encoder) or the fan malfunctioned and the exhaust gases' temperature is too high while the fan stopped for safety reasons.
What to do	Turn off the stove by pressing the ON/OFF button for several seconds. • The sound signal stops • Turn off the stove by pressing the ON/OFF button for several seconds. • If the fan does not respond, it has stopped working to cool down and will restart in a few minutes. • You must perform monthly maintenance of the stove. • After cleaning the stove, restart it by pressing the ON/OFF button.

• Some of the above problems can be solved by following the suggested instructions. All these operations must be performed under safe conditions (meaning the boiler must be cold, unplugged, etc.).

• To solve problems that require intervention inside the stove or in the combustion chamber, you should consult a professional, as provided in the applicable technical regulations. For this reason, we advise you to contact a service center authorized by the manufacturer.

• Any unauthorized technical intervention and/or use of non-original parts can lead to a dangerous situation for the user but also cause the warranty to be voided and the manufacturer to be released from any liability.

Note: The quality control of each stove requires it to be turned on and tested for all operation modes. Therefore, it is possible to find leftover pellet in the pellet storage and the pellet feeder.

11. WARRANTY STATEMENT

Smederevac d.o.o. declares that the stove will function flawlessly if you follow the given instructions. We undertake to provide spare parts and service the stove in the event ofmalfunctions that occur during the warranty period and to eliminate malfunctions in the period prescribed by the law of the Republic of Serbia. If we do not fulfill the obligation to eliminate the cause of malfunction within the specified period, you have the right to replace the stove with a new product.
The warranty is valid from the day of purchase of the stove, which is proven by a correctly filled out warranty card and fiscal receipt.
For the customers outside of the Republic of Serbia, this obligation will be assumed by authorized distributors.

THE WARRANTY PERIOD FOR THIS PRODUCT IS 25 MONTHS.

The warranty shall not cover damage caused by atmospheric, mechanical, electrical-chemical processes, non-compliance with instructions, poor storage conditions and inadequate transport. Also, if the damage was caused by force majeure (lightning, flood, fire...), electric shock or inadequate working conditions, the warranty shall not be valid. The parts that are subject to wear and tear during operation are not subject to warranty, such as glass and glass braids. The protective paint and coated parts of the stove change color during operation, which is a natural property of the applied materials, so they are not subject to warranty. Please report malfunctions by notifying **Smederevac d.o.o.** verbally or in writing (contacts are in the last page of the instructions).

The warranty shall expire if you do not follow the given instructions, handle the stove unprofessionally, perform unprofessional interventions or install parts that do not correspond to the original ones.
When reporting a malfunction, refer to the information from the warranty card, which must be duly completed. Each intervention of the service technician for complaints that are not subject to the warranty will be charged according to the official service price list.

The manufacturer denies any direct or indirect liability for:
- poor maintenance
- non-compliance with the instructions
- use contrary to the safety measures of the installation (electric hydraulic) which are not compliant to the valid standards in the country where the stove is installed
- installation by unqualified and untrained persons
- change and repair performed by an unauthorized person
- use of non-original parts
- damages due force majeure
- use of pellet that is not compliant to the standards recommended by the manufacturer - pellet of inappropriate dimensions or characteristics (see chapter 8 p.12) or pellet containing foreign bodies that cause disturbances that affect the operation of the product (dispenser clogging, damage to motor reducers).

Smederevac

Smederevac d.o.o.

Djure Strugara 20 I 11300 Smederevo I Serbia I www.smederevac.com