Smederevac

INSTALLATION AND OPERATING INSTRUCTIONS

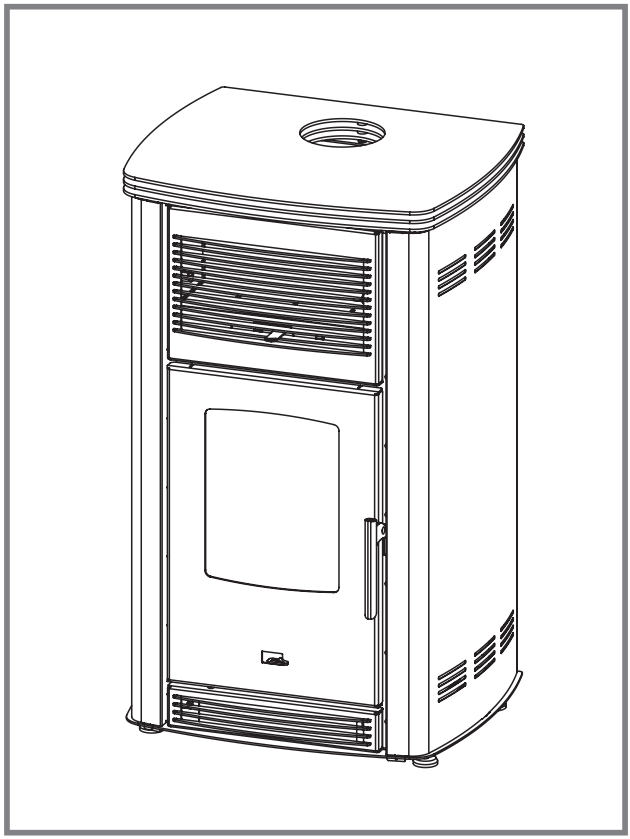

Solid Fuel Stove

ELIT II

TO OUR RESPECTED CUSTOMERS

Thank you for your trust and decision to buy our product.

You have made a good choice, because this stove's technical characteristics place it at the very top of its class, which you will see for yourself during use.

Please read these instructions carefully before you start using the stove, as you will find tips for proper handling in it.

We believe that you will join a long list of satisfied customers of our products.

Smederevac d.o.o.

TABLE OF CONTENTS

Warning before use 2
Description of the stove 3
Stove installation 5
Lighting a fire and firing 8
Operating the stove 9
Stove cleaning and maintenance 12
Malfunctions and recommendations for their elimination 13
General 14
Environmental protection tips 14

WARNING BEFORE USE

In order for your stove to operate properly, it is important to read this manual and strictly follow the operating instructions.

- For firing, use solid fuels such as wood, briquettes, and low-calorie coal. It is forbidden to place explosive devices and substances in the firebox or on the stove. It is forbidden to keep highly flammable substances in the immediate vicinity of the stove.
- For proper combustion, in normal operating mode, the draft in the chimney should be from 12±2 Pa. If the draft is greater than 15 Pa, a damper should be installed in the chimney. It is not permitted to reduce the diameter of the flue pipes.
- The room in which the stove is located must be regularly ventilated for the inflow of fresh air necessary for combustion.
- Parts of the stove are very hot during operation so proper precautions are necessary when operating the stove. Do not allow children to operate the stove and play near the stove.
- Only spare parts allowed by the manufacturer may be installed in the stove. No modifications must be made to the stove.
- Slight smoking may occur during the initial firing, especially from the stove hotplate. This is a common phenomenon that occurs due to the combustion of deposits on the stove hotplate (anti-corrosion protection, paints, dust). Ventilate the room where the stove is located during the initial firing.
- It is not advisable to connect the stove to a common chimney as this may reflect poorly on the required draft. A device that uses gas as fuel must not be connected to the same chimney.
- When firing, use protective gloves because the door handles are heated.
- National and local regulations relevant to the installation and operation of the stove must be observed.
- Operation is permitted only with the firebox door closed.
- After each use, all air supply regulators must be closed.
- The appliance must not be used if the firebox door gasket/rope is visibly damaged or has come off the product.

In the event of non-compliance with the operating instructions, the manufacturer shall not be liable for any damage to the stove.
Note:
The stove is intended for installation in an enclosed indoor space, and it is intended for space heating.

The **Technical Data** table (page 4) shows the nominal output of the product for the combustion of a specified quantity of fuel (wood/coal) (as stated in the **Technical Data** table), with a specified moisture content and wood type (up to 20% moisture, beech wood) and a specified chimney draft (12±2 Pa). This appliance is Type B appliance, in accordance with standard EN 16510, and must be connected to an appropriate chimney. The chimney temperature class is T400 G. All data contained in the **Technical Data** table have been verified in a notified laboratory in accordance with European standards EN 16510-2-1 and EN 16510-1. When selecting a stove, consideration should be given to

the area/volume of the space to be heated. A simple method for calculating the required stove output is as follows: 1 kW of stove output heats approximately 6.5 m² (with a standard room height of 2.6 m). When calculating the required output for heating the desired space, the following building characteristics should be taken into account:

- whether the building is insulated
- the quality of the joinery (windows and doors)
- the diameter and height of the chimney with adequate draft

STOVE DESCRIPTION

The stove is manufactured and tested in accordance with European standards EN 16510-2-1 and EN 16510-1.
The stove is designed for space heating.
The firebox door is made of 3mm thick steel, features transparent heat-resistant glass, and is equipped with an air flow regulator.
The flue gas outlet connection is made of cast iron and is located on top of the stove.
All materials used in the manufacture of the stove are recyclable.
The sealing elements are made of asbestos-free materials.

Stove components (Figure 1):

1 - Stove base
2 - Firebox door
3 - Primary air regulator
4 - Heat-resistant glass
5 - Stove door handle
6 - Secondary air regulator
7 - Side panel
8 - Stove cooktop
9 - Flue gas outlet
10 - Ceramic panel

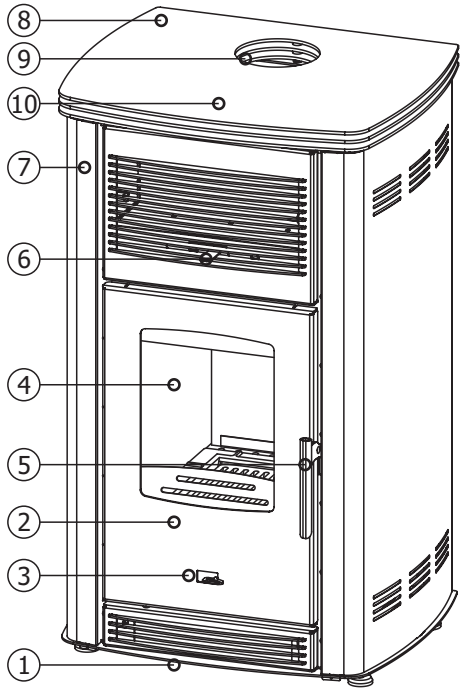

Figure 1.

Technical data:

Table 1 in accordance with EN 16510-1 is an additional document supplied together with this manual. Table 1 contains information on the characteristics of this appliance.

Nominal power		7,8 kW
Efficiency rating		85,1 %
Seasonal efficiency		75,1 %
Dimensions of the stove (HxWxD)		985x588x493 mm
Dimensions of the firebox (HxWxD)		298x400x364 mm
Stove weight		124 kg
Position of the chimney connection		Central
Chimney connection diameter		Ø 120mm
Flue gas temperature		197 °C
Mass flow rate		5,5 g/s
CO content (normalized to 13% O_2)		1002 mg/Nm³
Dust emission (normalized to 13% O_2)		31 mg/Nm³
OGC (normalized to 13% O_2)		89,5 mg/Nm³
NOx (normalized to 13% O_2)		101,5 mg/Nm³
Fuel consumption at nominal power		2,2 kg/h
Minimum distance from flammable substances:		
- from the back wall	d_R	55 cm
- from lateral walls	d_S	55 cm
- from the top side	d_C	75 cm
- from the front side	d_P	120 cm
- in the front radiation area on the floor	d_F	70 cm
- in the radiation area toward the side wall	d_L	90 cm
- below the bottom part	d_B	3 cm

Dimensions of the stove:

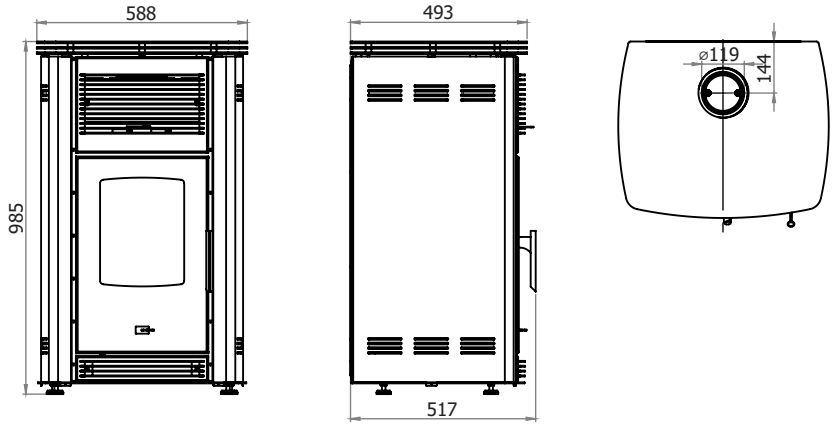

INSTALLATION OF THE STOVE

When installing the stove, attention must be paid to the applicable building and fire safety regulations and provisions.

- The stove must not be placed in the immediate vicinity of wooden elements, refrigeration devices, plastic furniture parts and other flammable materials because during its operation (when burning fuel) it achieves a high operating temperature that is dissipated through external shell of the stove.
- If the surface on which you will install the stove is made of highly flammable material (wood, vinyl flooring, laminate wood flooring...), it is necessary to install a sheet metal protection - 10cm of width laterally, and 50 cm of width in front.
- Connect the stove to the chimney with flue pipes through the connection at the back of the stove, while ensuring adequate sealing and smoke flow from the stove to the chimney. The flue pipe must not be pushed too deep into the chimney so as not to reduce the cross-sectional area and thus disrupt the draft in the chimney. Do not use reducers that would reduce the cross-section of the smoke extraction pipe.
- The stove requires the supply of fresh air into the room in which it is installed, whereby the surface of the fresh air intake opening must not be less than 0.4dm². Fans operating in the same room as the stove may interfere with the operation of the stove.
- Before installing the stove, check the draft of the chimney, as it is one of the key factors for proper functioning of the stove. Draft depends on the correct condition of the chimney and meteorological conditions. If the draft in the chimney is poor, check the chimney for faults. The chimney should be located inside the building, and if it is on the outer walls of the building, it is recommended to insulate the chimney.
  One of the simplest ways to check the chimney draft is by using an A4 sheet of paper placed over the chimney opening where the flue pipe connects. If the paper remains attached and stays against the wall, the chimney has good draft; otherwise, if the paper falls, the chimney draft is insufficient and problems in stove operation may occur.

A proper chimney must meet the following requirements:

- the chimney must be at least 0.5 m higher than the roof and must extend above nearby objects/obstacles (adjacent house, tree, etc.) (Figure 2a).
- the chimney has to be of appropriate cross section.
- the flue pipe must not be inserted too deeply, and the connection openings must be sealed (Figure 2b).
- the chimney must be free of foreign objects, damage, and accumulated soot or other deposits (Figure 3a).
- the cleaning door and all other openings must be tightly closed in order to prevent the formation of so-called "false" air (Figure 3b).

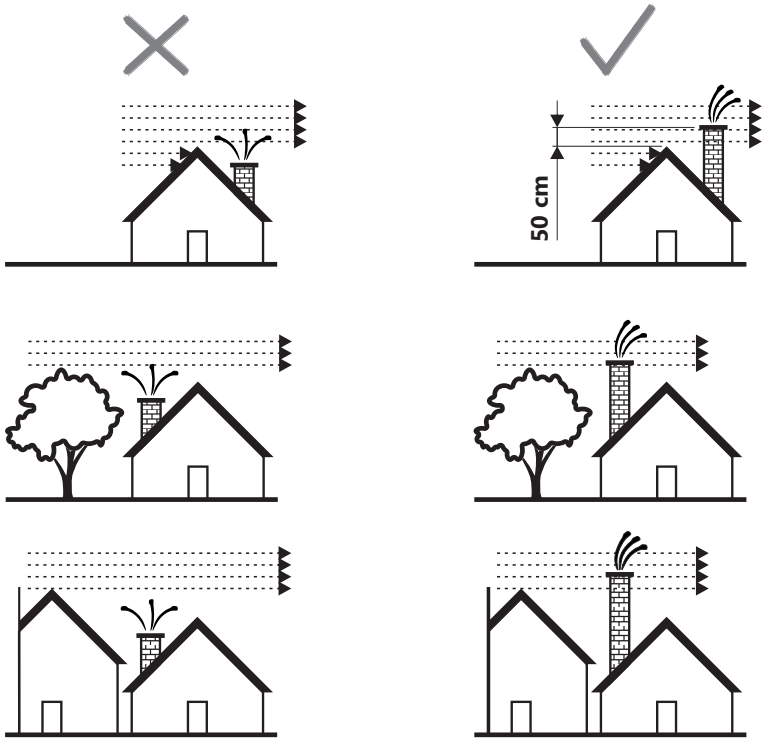

Slika 2a

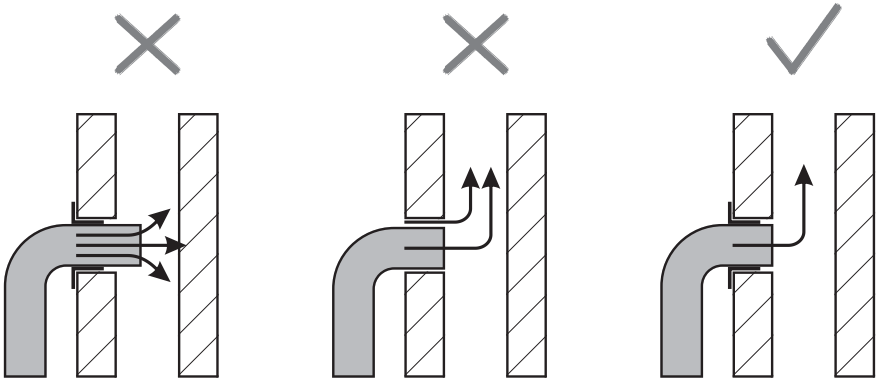

Slika 2b

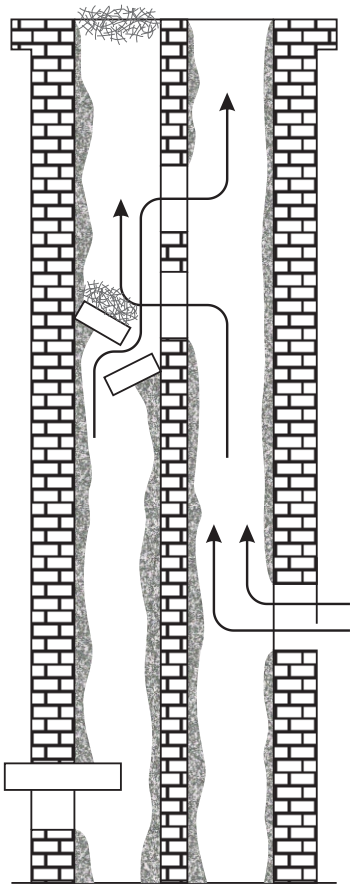

Figure 3a

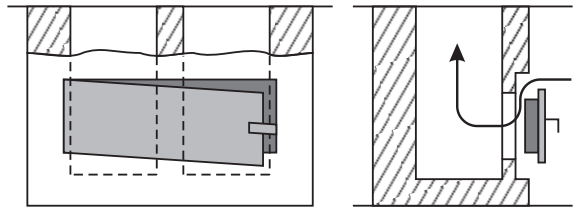

Figure 3b

Chimney defects may also occur if:
- the chimney has an insufficient cross-section,
- multiple stoves or other devicess are connected to the same chimney.

LIGHTING A FIRE AND FIRING

Before the first firing, wipe all enameled surfaces of the stove with a dry cloth to avoid burning impurities on the stove and creating unpleasant odors.
Fire in the stove should be started in the following order:

- open the firebox and stove ash drawer doors,
- insert the firing material (shredded wood on ungreased wrinkled paper) into the firebox,
- light a fire,
- close the firebox door and open the primary air regulator (Figure 1, item 3).
- when the first embers are formed, insert larger pieces of wood or coal into the firebox and close the firebox door. If briquettes are used as fuel, all the used amount of fuel must be allowed to glow before reducing the draft in half.
- when adding fuel, open the firebox door (Fig.1, pos. 2) only a couple of degrees, wait 4-5 seconds, then slowly open it wide. Do not open the door abruptly, because when there is a strong flame in the firebox, it may spread out towards the room.

By adjusting the draft in the stove, you regulate the temperature, output, and combustion rate of the fuel. This is done moving (left-right) the primary air (draft) regulator (Fig.1, item 3).
The stove has secondary air regulation to support combustion and keep the firebox glass clean. By combining the primary air supply via the regulator on the door and the secondary air supply via the handle above the firebox door (Fig. 1, item 6), the desired combustion can be achieved.
Tertiary air regulation ensures more efficient combustion and increases the efficiency of the stove.

Wood and briquettes are recommended for firing.

Fuel oil, gasoline and the like must not be used as fuel, because the use of liquid fuels creates conditions for stove damage and explosion.

Attention!

- Do not use waste of organic origin, food residues, plastic items, flammable and explosive materials as fuel, because their combustion disturbs the proper operation of the stove and can cause damage and pollution to the environment.
- Increased outdoor temperatures can cause poor airflow (draft) in the chimney, so more frequent firing in smaller quantities is recommended.
- Avoid using the stove in cases where meteorological conditions are poor for stove operation and in case of strong wind, as this affects the required underpressure in the chimney. In these cases, smoke may return to the room where the stove is located. Then it is more difficult to start a fire.

We recommend firing at 1h intervals with up to 10cm of fuel in the firebox by arranging the wood in cross formation for greater draft. The recommended load is two logs with dimensions 100×100×250mm, with an average total weight of 2.2kg.

After each filling, it is recommended that the stove burns for at least 30 minutes with maximum power, in order to burn all volatile ingredients that are the reason for condensation in the stove during this phase of combustion.

For the correct operation of the stove, it is necessary to:
- regularly clean the stove and chimney,
- regularly ventilate the rooms for good combustion,
- regularly remove ash from the stove ash drawer,
- regularly remove the accumulated slag and unburned matter from the stove with cleaning accessories.

OPERATING THE STOVE

Light the fire with a moderate fire in order to avoid thermal shocks.
Maximum wood quantity for safe operation is 2.2 kg.
The next quantity of wood is inserted only after the previous quantity has burned.
Do not allow clogging of the firebox bottom cast grate with ash and unburned fuel. Clean the bottom cast grate.
Open the door slowly and carefully, never by abruptly pulling, allowing the pressure in the firebox and the room to equalize, otherwise smoke may appear in the room.
The stove is designed and intended for operation with the door constantly closed, except during refueling. Do not open the door unnecessarily.
The wood must be with a maximum of 20% humidity for maximum burning effect.
Otherwise, tar and gases form that create creosite with water vapor. If it occurs to a large extent, a fire in the chimney may occur. A fire in a chimney can most easily be recognized by: the characteristic sound coming from the chimney, such as loud roaring, visible flames coming out of the chimney, the high temperature of the surrounding walls and the characteristic smell of arson. If a fire spreads, take the following steps:
- Call the fire department immediately
- Reduce the oxygen supply to the chimney and put down the fire in the stove;
- Do not insert anything into the chimney and make sure that the fire does not spread to a wooden structure or other combustible material nearby;
- **NEVER extinguish the chimney with water or pour water into the stove**;
- You can only extinguish a chimney fire with a dry powder extinguisher.
- Only surrounding material can be extinguished with water;
- Do not cool the surrounding walls with water;

Note:
If the fire in the stove becomes dangerously intense for any reason, take the following measures:
Close the air dampers supplying combustion air.
If necessary, throw sand prepared for this purpose into the firebox or use a special non-flammable fire blanket.

It is recommended to have a fire extinguisher available.

Before the second firing, clean the firebox bottom cast grate with an auxiliary accessory so as to allow the supply of fresh air.
Clean the ash drawer regularly, making sure there is always room for ashes.

The stove is designed to operate in periodic mode. In order to maintain the required nominal power, the firebox is periodically filled with the specified amount of fuel.
The stove is intended to operate in the permanent embers mode or in the heat accumulation mode.

I - primary air regulator
Set the primary air regulator to the open position (Fig. 4a) during firing and keep it in that position until stable stove operation is established after adding larger pieces of wood or coal. After that, set the regulator to the closed position (for wood and wood briquette combustion – Fig. 4b) and keep it in that position throughout stove operation. When closed, the regulator prevents air supply below the grate, thereby reducing combustion intensity. If the fuel is of poor quality, partially open the regulator.
When using coal as fuel, do not close the regulator. With the primary air regulator closed (Figure 4b) a nominal output of 7.8 kW is achieved.

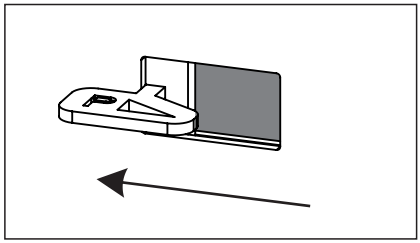

Figure 4a

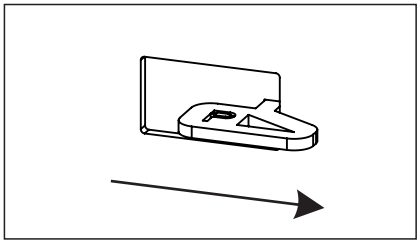

Figure 4b

II - primary air regulator
Place the secondary air regulator in the closed position (Fig. 5a) when firing and keep it in this position until the operating mode of combustion is established after inserting larger pieces of wood or coal. After that, set the regulator to the open position (Figure 5b) and keep it in this position throughout the operation of the stove. Secondary air is used for cleaning the glass on the firebox door and for better combustion.

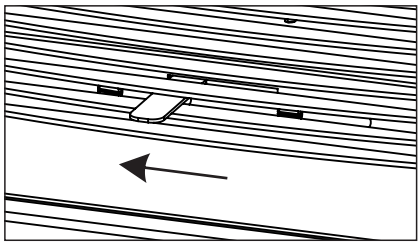

Figure 5a

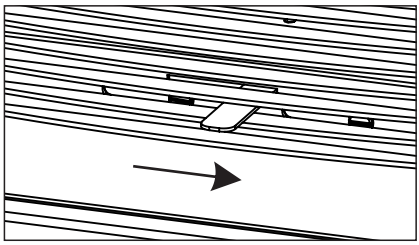

Figure 5b

STOVE CLEANING AND MAINTENANCE

Regular and proper cleaning ensures correct operation and extends the service life of the stove. All cleaning operations, whether the exterior or interior surfaces, are always performed on a cold stove.

Cleaning of external surfaces - carried out with a soft cloth that will not damage the surfaces of the stove. Cleaning chemicals do not damage the surfaces of the stove and can be used. Do not clean painted and enamelled surfaces with abrasives.
Cleaning of inner surfaces - use protective gloves when cleaning the stove. Clean the inner walls of the stove firebox from accumulated soot, pick up small and unburned pieces from the bottom cast grate, clean the ash drawer and remove the accumulated ash inside the stove.
Cleaning of glass surfaces - the glass of the stove gets dirty during the operation. Use mild detergents for cleaning. Do not use abrasives as the surface of the glass may be damaged. Only clean the glass when it has cooled down.
Chimney cleaning and maintenance - cleaning and control of the chimney is recommended at least once a year as well as after the prolonged periods of non-use. Regular maintenance and control of the chimney will prevent the occurrence of fire and poor operation of the stove. Regular chimney maintenance is mandatory to prevent the risk of fire.

MALFUNCTIONS AND RECOMMENDATIONS FOR THEIR ELIMINATION

The following table shows the most common malfunctions and recommendations for their elimination:

Malfunction	Possible cause	Troubleshooting
The stove heats poorly	- Improper operating - Inadequate chimney	- Read and follow the instructions carefully - In the event that, despite the fulfillment of all requirements from the instructions, the malfunction is still present, contact the maintenance service
Difficulties in lighting a fire	- closed air supply regulator - wet wood - lack of oxygen	- Open the air supply regulator and provide the primary air supply - Use dry wood - Ventilate the room to ensure fresh air
Furnace door glass is soiled in a short time	- wet wood - too much fuel - insufficient draft - secondary air supply closed	- use dry wood - see the proposed amount of combustion fuel in the instructions - check the connection with the chimney - carefully read the instructions and apply the tips for providing secondary air

GENERAL

If all the recommendations for installation, air regulation and cleaning given in this manual are met, the stove is a proven safe appliance for household use.
Before installing the stove, remove the packaging. Take care of possible injuries as the wooden slats are fastened by nails. Dispose of the plastic bag in the designated place in accordance with the regulations. Dispose of the old furnace that you no longer want to use in accordance with the regulations.
All complaints, regarding malfunctions or poor operation of the furnace, should be reported to the factory or authorized service center by telephone or in writing, with providing a receipt. All contact information is provided at the end of this manual.
Any malfunction on the stove must be eliminated by the factory maintenance service.
If unauthorized persons perform servicing or any repairs and alterations on the stove, the owner loses the right to service maintenance guaranteed by the manufacturer's warranty.
The procurement of spare parts is carried out exclusively through the factory maintenance service, based on the positions and figures in this manual or their names.
The manufacturer bears no responsibility if the customer does not comply with the stove operating and installation instructions.

ENVIRONMENTAL PROTECTION TIPS

Packaging

- Packaging material is 100% recyclable.
- When disposing of waste, comply with local regulations.
- Packaging material (plastic bags, polystyrene-styrofoam parts, etc.) should be kept out of reach of children, as it is a potential source of danger.
- Take care of safety when removing and disposing of wooden slats as they are fastened by nails.

Product

- The appliance is made of recyclable materials. When disposing to waste landfill, comply with applicable environmental laws.
- Use only recommended types of fuel.
- It is forbidden to burn inorganic and organic waste (plastics, chipboard, textiles, oiled wood, etc.), as they release carcinogens and other harmful substances during combustion.

Smederevac

Smederevac d.o.o.

Djure Strugara 20 I 11300 Smederevo I Serbia I www.smederevac.com